5/7/2008 2:51:42 PM \\GDOT-DSN1\GOPLOT\OCF\go_TIFF_output.qcf gowens T:\GARY\new d-42\d-42.prf GO-HOB

STATE	PROJECT NUMBER	SHEET NO.	TOTAL SHEETS
GA.	0009629	80	80

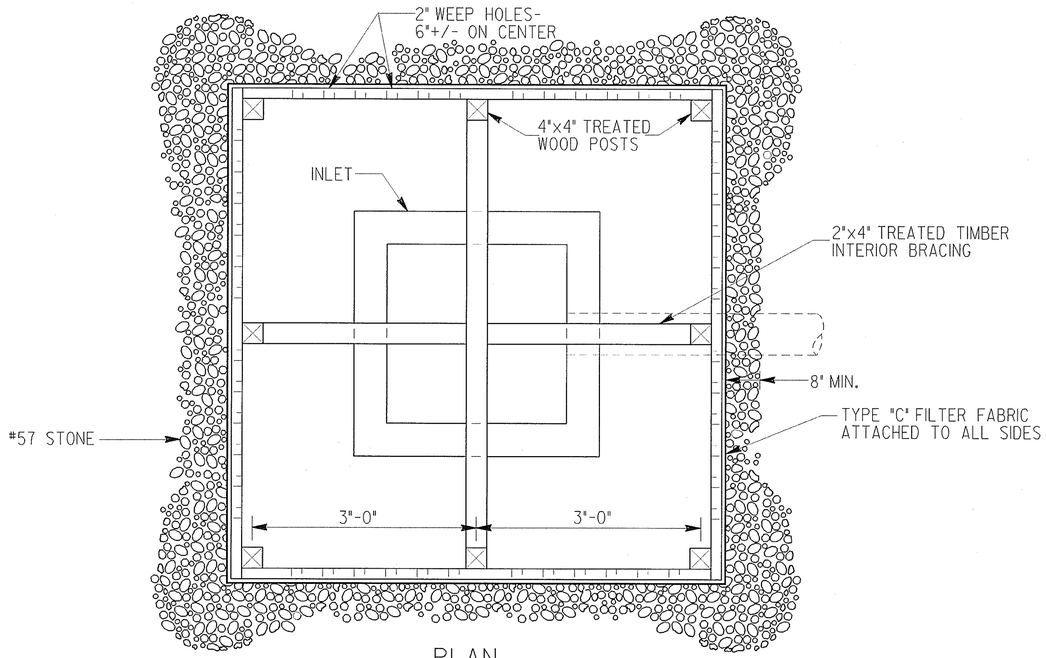

PLAN

NOTES:

BAFFLE BOX SHALL BE CONSTRUCTED OF 2"x4" TREATED TIMBER SPACED A MAXIMUM OF 1" APART OR OF PLYWOOD WITH WEEP HOLES 2" IN DIAMETER PLACED APPROXIMATELY 6" ON CENTER VERTICALLY AND HORIZONTALLY.

GRAVEL SHALL BE PLACED OUTSIDE THE BOX, ALL AROUND THE INLET, TO A DEPTH OF 2 TO 4 INCHES. THE ENTIRE BOX SHALL BE WRAPPED IN TYPE "C" FILTER FABRIC THAT SHALL BE ENTRENCHED 12 INCHES AND BACKFILLED.

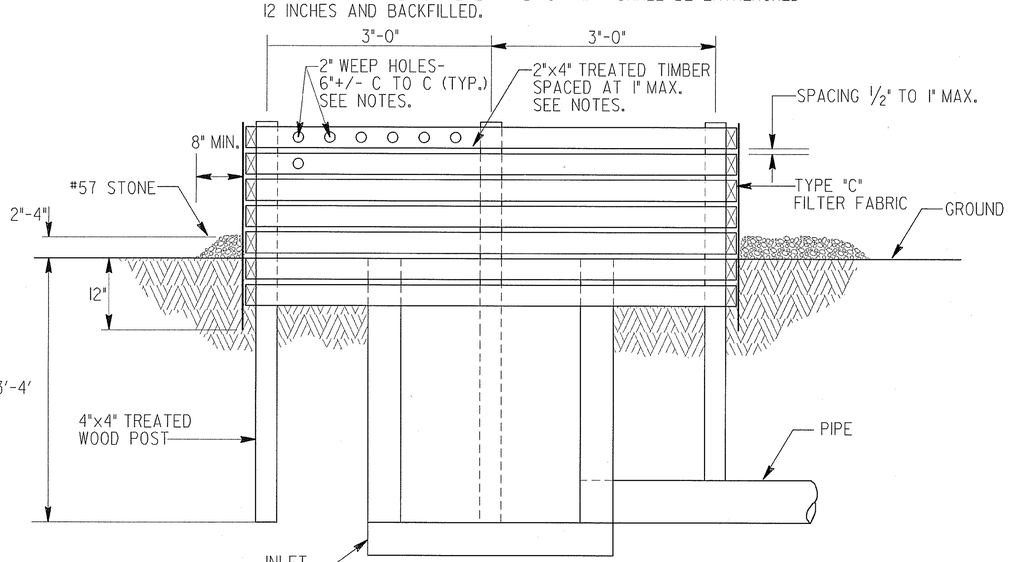

ELEVATION

BAFFLE BOX (Sd2-B)

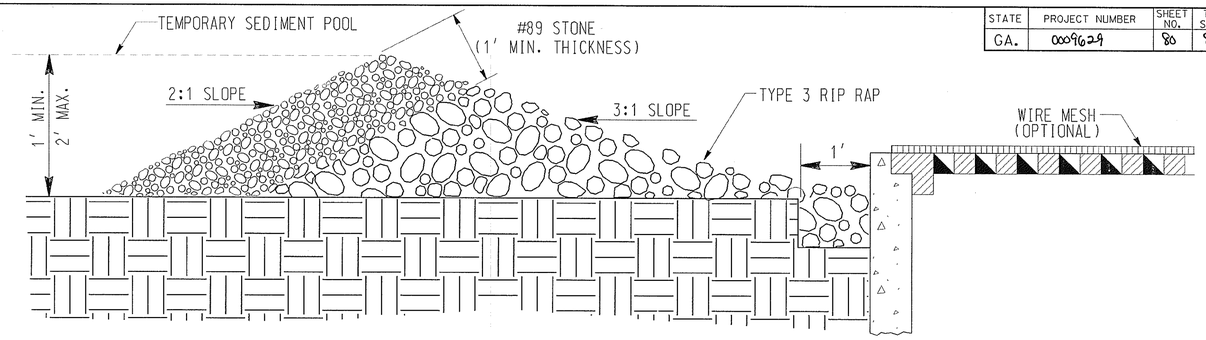

GRAVEL DROP INLET PROTECTION (GRAVEL DONUT) Sd2-G

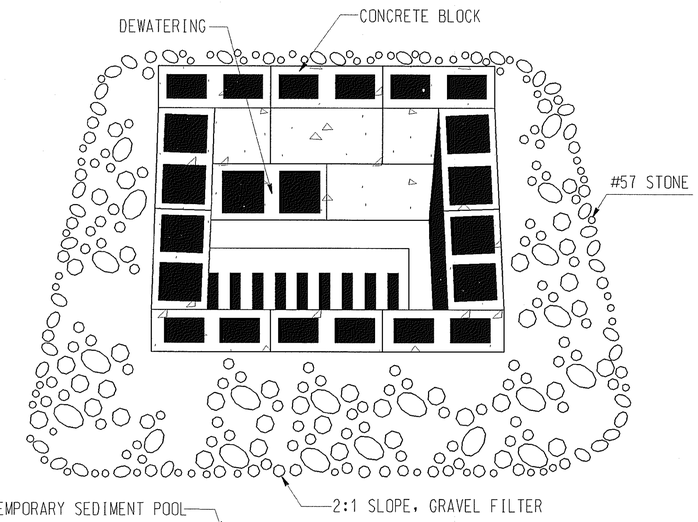

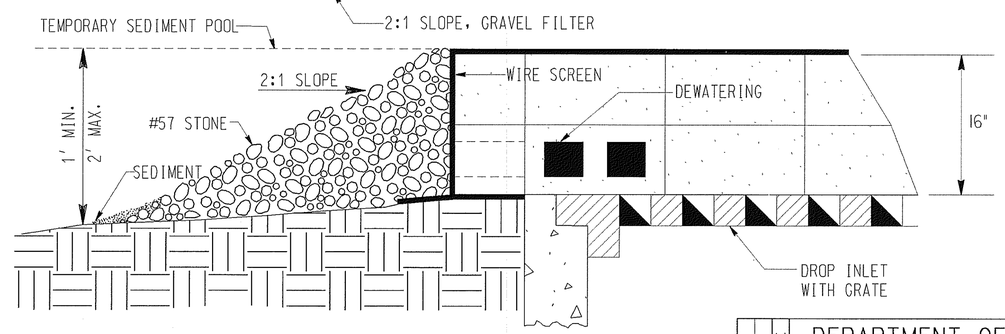

BLOCK & GRAVEL DROP INLET PROTECTION (Sd2-Bg)

BASIS OF PAYMENT:
CONSTRUCT AND REMOVE INLET SEDIMENT TRAP _____ EACH

DATE	DEPARTMENT OF TRANSPORTATION STATE OF GEORGIA	
REVISION	CONSTRUCTION DETAIL INLET SEDIMENT TRAPS BAFFLE BOX Sd2-B BLOCK AND GRAVEL DROP INLET PROTECTION Sd2-Bg GRAVEL DROP INLET PROTECTION Sd2-G NO SCALE MAY 2008	
BY		NUMBER D-42

5/7/2008 2:51:42 PM \\GDOT-DSN1\GOPLOT\OCF\go_TIFF_output.qcf gowens T:\GARY\new d-42\d-42.prf
4/7/2010 1:20:05 PM \\GDOT-DSN1\GOPLOT\OCF\D7_Klp5000-2.qcf anettervlle W:\Andre\0009629_I-285 at Glenridge\Standards and Details\gcded42.tiff D7-Chamblee