STATE	PROJECT NUMBER	SHEET NO.	TOTAL SHEETS
GA		92	97

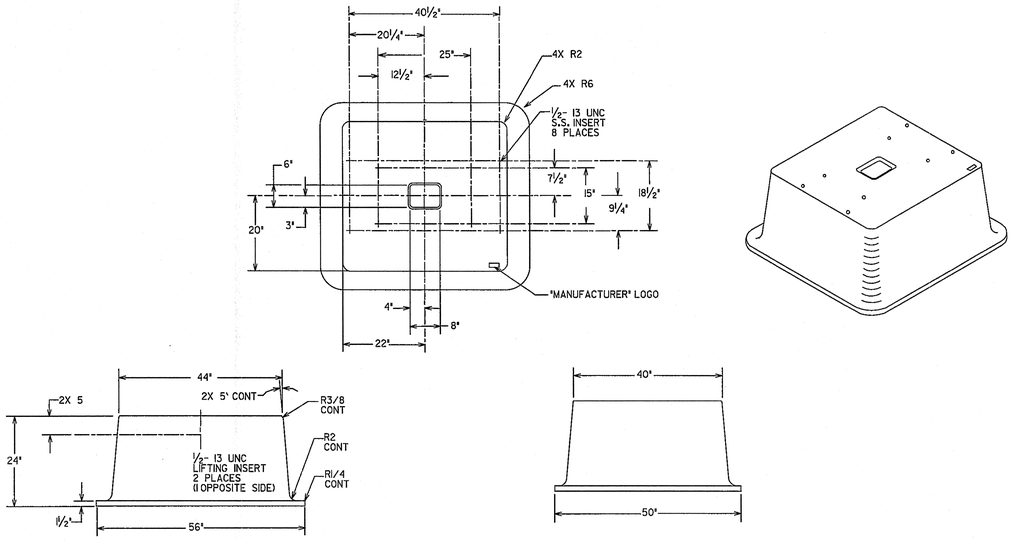

PREFABRICATED 332 CONTROLLER BASE

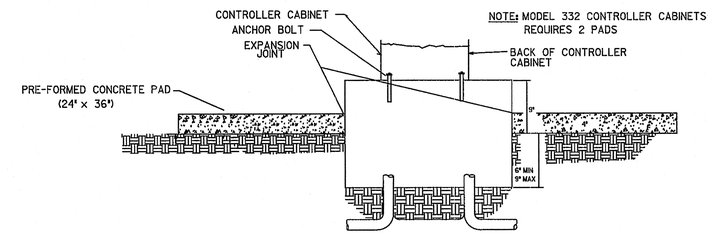

NOTE: MODEL 332 CONTROLLER CABINETS REQUIRES 2 PADS

SECTION A-A

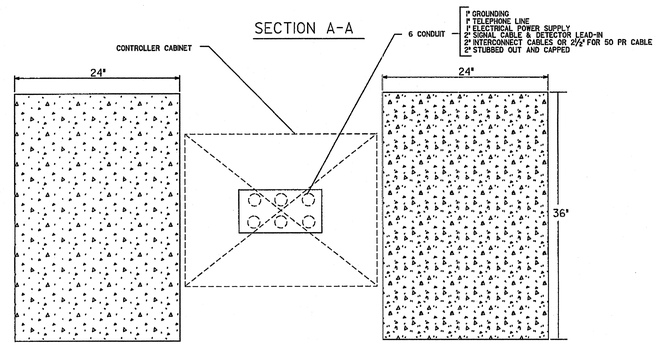

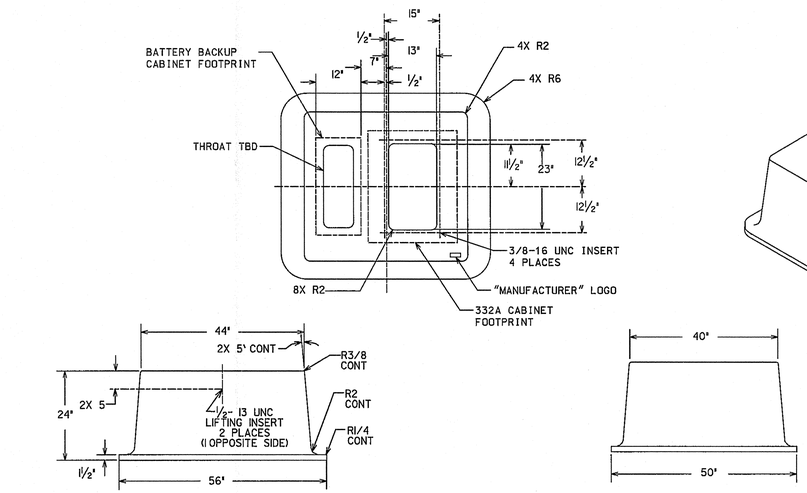

PREFABRICATED CONTROLLER BASE
WITH BATTERY BACKUP BASE MOUNT EXTENSION

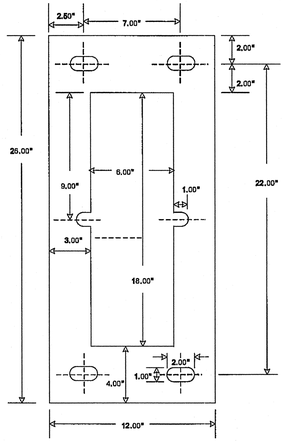

BATTERY BACKUP BASE MOUNT
CABINET ANCHOR BOLT PATTER

Guidelines For Usage On Metric Projects

When these details are incorporated into plans and or projects that are being prepared or constructed in metric units, exact or precise conversion to metric units is not required. The dimensions shown that are in feet and inches may be converted to corresponding metric units using the following "Rounded-Off" conversion factors: 1" =25mm, 4"=100mm, and 12" or 1' =300mm. All measurement notes that refer to linear feet and square yards shall be interpreted to mean linear meters and square meters.

GEORGIA
DEPARTMENT OF TRANSPORTATION

- NO SCALE -

REVISION DATES		
3/5/2007		

STATE OF GEORGIA
DEPARTMENT OF TRANSPORTATION
OFFICE: TRAFFIC OPERATIONS
SIGNAL DETAILS

DETAILS OF CONTROLLER CABINET EQUIPMENT DECEMBER 1998

DRAWING No. TS-03b

3/1/2007 GPLN