STATE	PROJECT NUMBER	SHEET NO.	TOTAL SHEETS
GA.		83	97

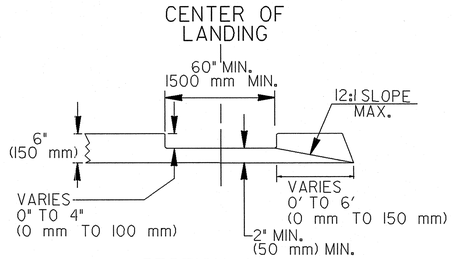

SECTION A-A

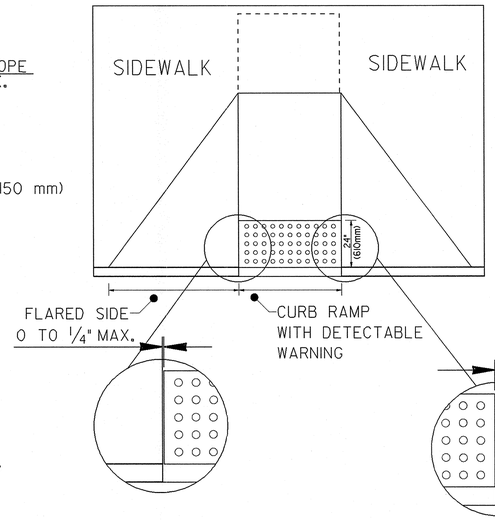

SIZE: DETECTABLE WARNINGS SHALL BE 24 INCHES (610 mm) IN THE DIRECTION OF PEDESTRAIN TRAVEL AND EXTEND THE FULL WIDTH OF THE CURB RAMP OR FLUSH SURFACE.

LOCATION: THE DETECTABLE WARNING SHALL BE LOCATED SO THAT THE EDGE NEAREST THE CURB LINE OR OTHER POTENTIAL HAZARD IS 6 TO 8 INCHES (150 mm to 180mm) FROM THE CURB LINE OR OTHER POTENTIAL HAZARD, SUSH AS A REFLECTIVE POOL EDGE OR THE DYNAMIC ENVELOPE OF RAIL OPERATIONS.

DOME SIZE AND SPACING: TRUNCATED DOMES SHALL HAVE A BASE DIAMETER OF 0.9 INCH TO 1.4 INCH (23mm-36mm) AT THE BOTTOM, A DIAMETER OF 0.45 INCH TO 0.91 INCH (11mm-23mm) AT THE TOP, THE TOP DIAMETER SHALL BE A MINIMUM OF 50% AND A MAXIMUM OF 65% OF THE BASE DIAMENTER, A HEIGHT OF 0.2 INCH (5.1mm) AND A CENTER-TO-CENTER SPACING OF 2.40 INCHES (61mm) DESIRABLE 1.60 INCHES (41mm) MINIMUM MEASURED ALONG ONE SIDE OF A SQUARE ARRANGEMENT. DOMES SHALL HAVE A SQUARE ARRANGEMENT. DOMES SHALL BE ALIGNED ON A SQUARE GRID IN THE PREDOMINANT DIRECTION OF TRAVEL TO PERMIT WHEELS TO ROLL BETWEEN DOMES.

VISUAL CONTRAST: DETECTABLE WARNING SURFACES SHALL CONTRAST VISUALLY WITH THE ADJACENT WALKING SURFACE EITHER LIGHT-ON-DARK OR DARK-ON-LIGHT. THE MATERIAL USED TO PROVIDE VISUAL CONTRACT SHALL BE AN INTEGRAL PART OF THE DETECTABLE WARNING SURFACE.

MATERIALS:

NEW CONSTRUCTION

THE DETECTABLE WARNINGS SHALL BE MADE OF MATERIALS SPECIFIED ON QPL 87.

RETROFIT OF EXISTING RAMPS

SURFACED APPLIED MATERIALS WILL ONLY BE APPROVED TO BE USED ON EXISTING WHEELCHAIR RAMPS.

INSTALLATION:

BRICK PAVERS SHALL BE SET IN A WET MORTAR BED. THE BED SHALL BE PLACED ON CONCRETE. THE CONCRETE SHALL BE A MINIMUM OF 4" THICK.

CERAMIC TILE SHALL BE EPOXIED IN PLACE OR SET IN A WET MORTAR BED. MANUFACTURER RECOMMEND ADHESIVE OR FASTENER SHALL BE USED IN THE INSTALLATION.

ALL OTHER MATERIALS SHALL BE INSTALLED ACCORDING TO MANUFACTURES DETAILS OR INSTRUCTION.

GENERAL NOTES:

RETROFIT SURFACED APPLIED MATERIALS ONLY:

1. CHANGES IN LEVEL OF 1/4" (6.4 mm) HIGH MAXIMUM SHALL BE PERMITTED VERTICALLY ON SURFACED APPLIED MATERIALS.
2. CHANGES IN LEVEL BETWEEN 1/4" (6.4 mm) HIGH MINIMUM AND 1/2" (13mm) HIGH MAXIMUM SHALL BE BELEVELED WITH A SLOPE NOT STEEPER THAN 2:1.

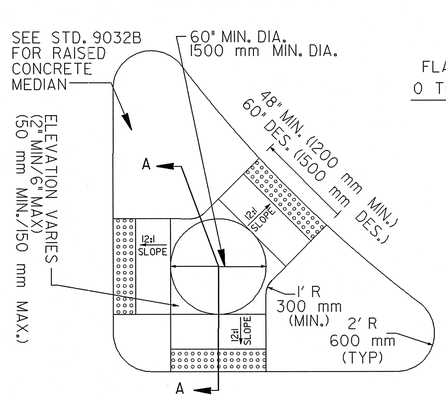

CONCRETE ISLAND WITH ELEVATED CUT THROUGH

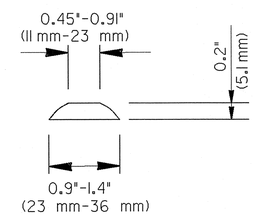

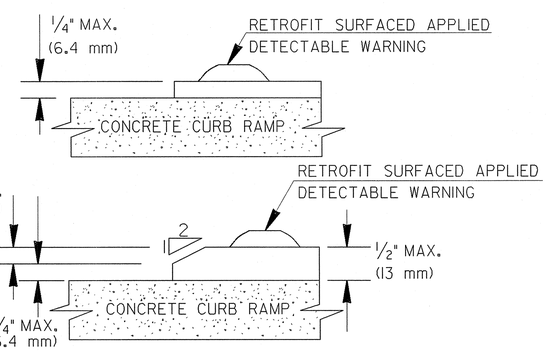

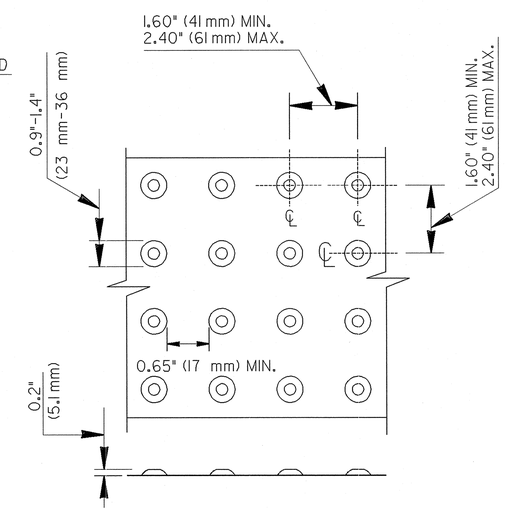

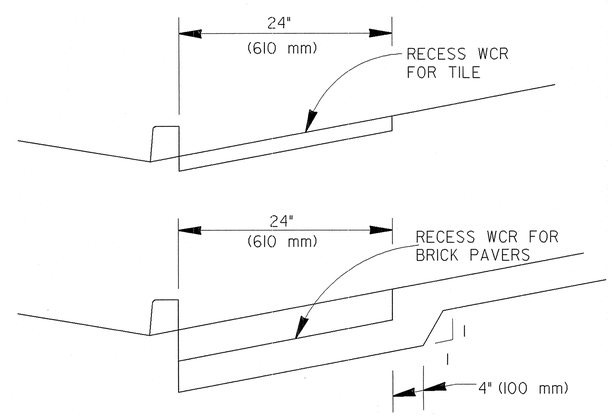

FOR TILE OR BRICK PAVERS NO VERTICAL LIP OVER 1/8" (3 mm) IS ALLOWED

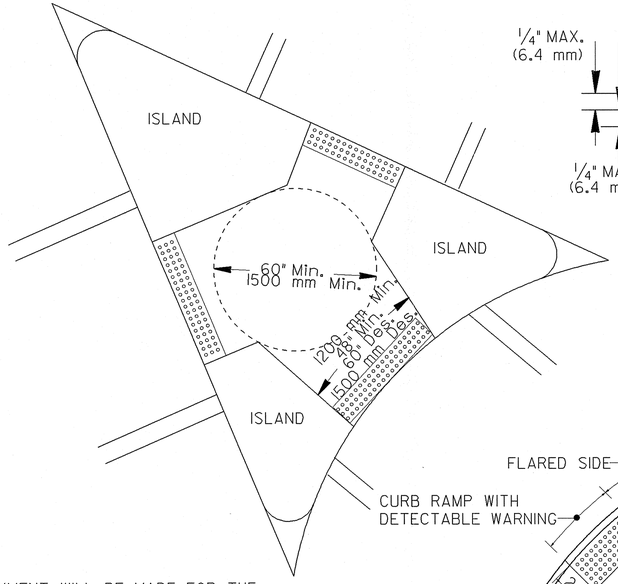

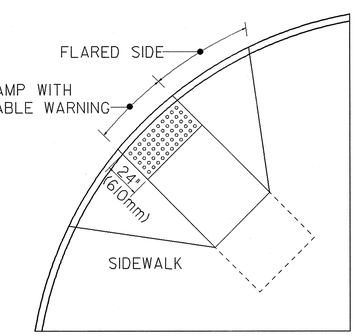

DETAIL FOR DETECTABLE WARNING AT CUT-THRU CONCRETE ISLAND

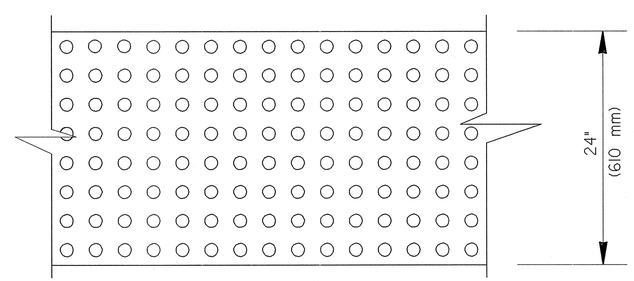

NO SEPARATE PAYMENT WILL BE MADE FOR THE DETECTABLE WARNINGS. THE COST SHALL BE INCLUDED IN THE PRICE BID FOR SIDEWALK (OR CURB CUT RAMP IF THE ITEM IS INCLUDED IN THE PROPOSAL).

FOR CUT-THRU ISLANDS AND EXISTING RAMPS, WHERE NO SIDEWALK OR CURB CUT RAMPS ARE IN THE PROPOSAL. THE COST OF THE DETECTABLE WARINGS SHALL BE INCLUDED IN THE OVERALL BID PRICE SUBMITTED.

BY	REVISION	DATE
GLO	ADDED RETROFIT DETAIL AND ADDED ALT. RAMP DETAIL AND GEN. NOTES	6-18-09
GLO	ADDED TOLERANCE TO DTL. REVISED TUNCATED DOMES AND NOTES.	10-2-06
GLO	REVISED	5-10-06
	REVISED	11-14-02
		7-29-02

DEPARTMENT OF TRANSPORTATION
STATE OF GEORGIA

SPECIAL DETAIL

DETECTABLE WARNING SURFACE TRUNCATED DOME SIZE, SPACING AND ALIGNMENT REQUIREMENTS

NO SCALE

MARCH 12, 2002

NUMBER
A4

6/18/2009 1:42:32 PM \\GDOT-DSN1\GDPLOT\DCF\go_1ff_output.qcf gowens V:\GARY\add ramp defaults\a4.prf