AS-BUILT PLANS - 08/30/13

STATE	PROJECT NUMBER	SHEET NO.	TOTAL SHEETS
GA.			

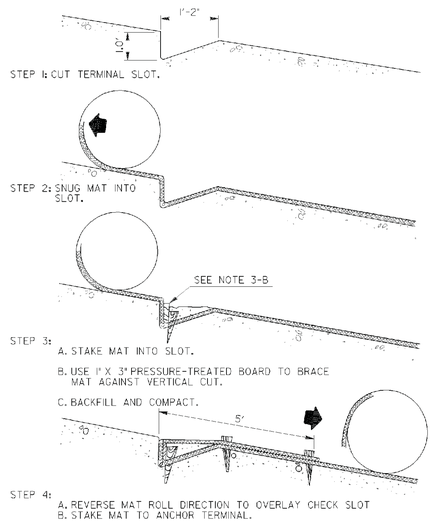

UPSTREAM TERMINAL

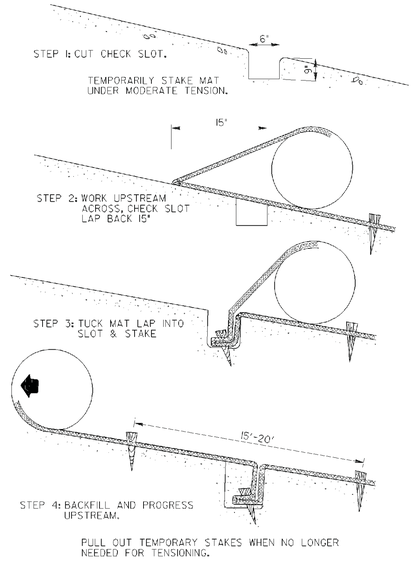

TRANSVERSE CHECK SLOT

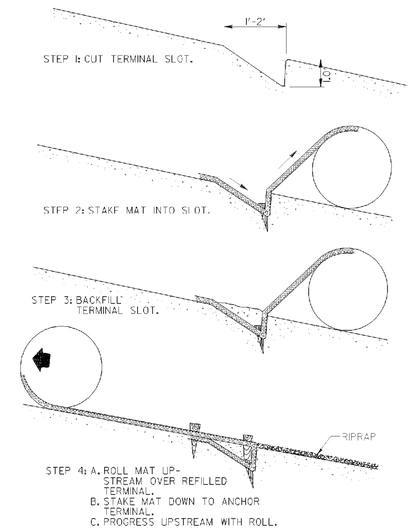

DOWNSTREAM TERMINAL

METAL MATTING - BLANKET STAPLE

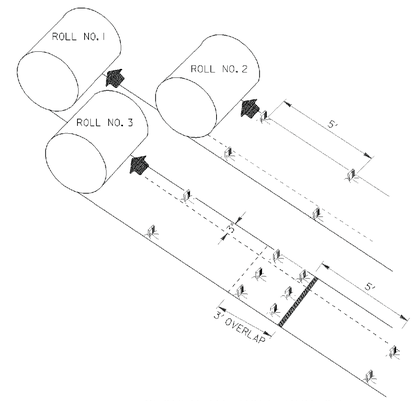

SEQUENTIAL ROLL RUN OUT IN CHANNELS

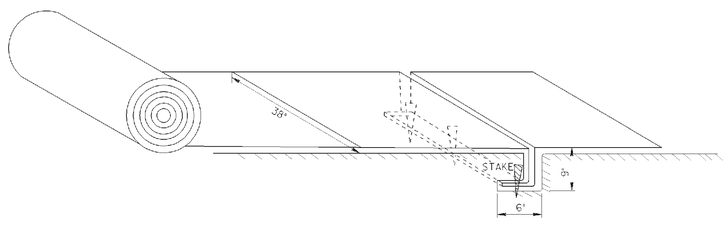

PICTORAL VIEW OF TRANSVERSE SLOT

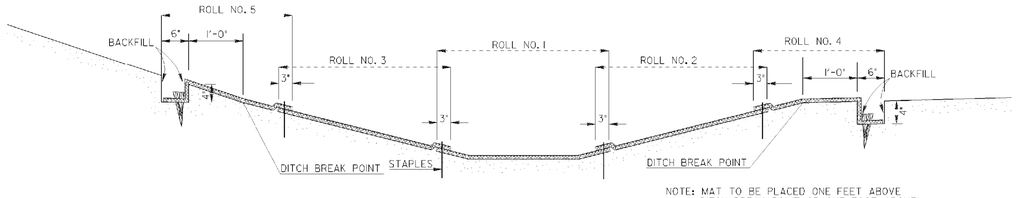

DITCH SECTION

NOTE: MAT TO BE PLACED ONE FEET ABOVE DITCH BREAK POINT OR ONE FOOT ABOVE THE 25 YEAR STORM.

GENERAL NOTES

1. INSTALLATION TO BE DONE AS PER MANUFACTURER'S RECOMMENDATIONS.
2. START AT DOWNSTREAM TERMINAL AND PROGRESS UPSTREAM.
3. FIRST ROLL IS CENTERED LONGITUDINALLY IN MID CHANNEL AND PINNED WITH TEMPORARY STAKES TO MAINTAIN ALIGNMENT.
4. SUBSEQUENT ROLLS FOLLOW IN STAGGERED SEQUENCE BEHIND FIRST ROLL. USE CENTER ROLL FOR ALIGNMENT TO CHANNEL CENTER.
5. WORK OUTWARDS FROM CHANNEL CENTER TO EDGE.
6. USE 3' OVERLAP AND STAKE AT 5' INTERVAL ALONG SEAMS.
7. USE 3' OVERLAPS AND SHINGLE DOWNSTREAM TO CONNECT LINING AT ROLL ENDS.
8. METAL STAPLES MAY BE USED IN LIEU OF WOODEN STAKES.

T.P.C.	REVISED SHEET LAYOUT & ADDED DITCH SECTION, ADDED METAL STAPLE.	1-19-11		DATE
				REVISION
				BY

DEPARTMENT OF TRANSPORTATION
STATE OF GEORGIA

CONSTRUCTION DETAILS
PERMANENT SOIL REINFORCING MAT
(TURF REINFORCING MATS)
INSTALLATION ON DITCHES

NO SCALE | AUGUST 1988

Designed
Drawn K.L.J.
Traced
Checked

NUMBER D-35

THE LPA GROUP
TRANSPORTATION CONSULTANTS
3595 ENGINEERING DRIVE
NORCROSS, GEORGIA 30092
(770) 263-9118

REVISION DATES

STATE OF GEORGIA
DEPARTMENT OF TRANSPORTATION
OFFICE: INNOVATIVE PROGRAM DELIVERY

EROSION CONTROL CONSTRUCTION DETAILS

DRAWING No. 56-006

3/1/2007 GPLN