AS-BUILT PLANS - 08/30/13

STATE	PROJECT NUMBER	SHEET NO.	TOTAL SHEETS
GA.			

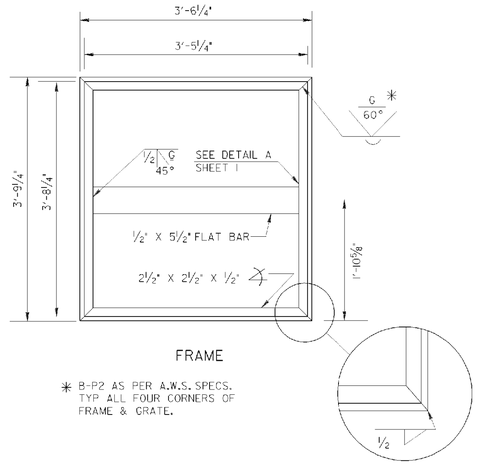

FRAME

* B-P2 AS PER A.W.S. SPECS. TYP ALL FOUR CORNERS OF FRAME & GRATE.

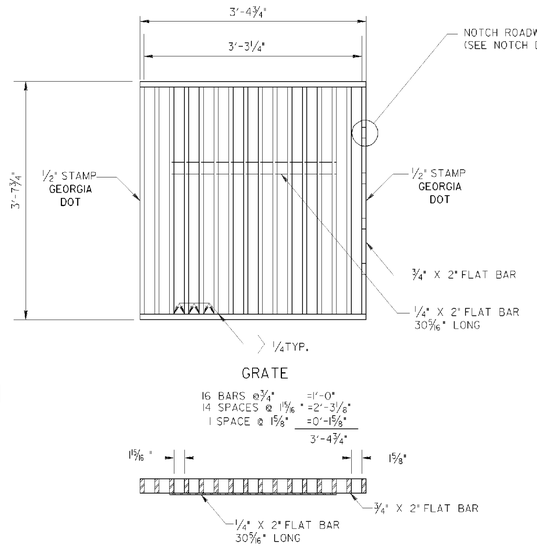

GRATE

FRAME AND GRATE DETAIL

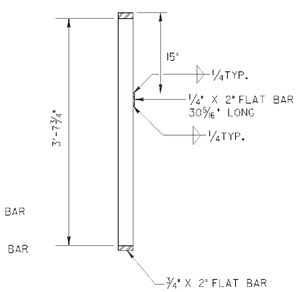

GENERAL NOTES:

1. SPECIFICATION : GEORGIA STANDARD CURRENT EDITION, AND SUPPLEMENTS THERETO.
2. NO SEPERATE MEASUREMENT OR PAYMENT SHALL BE MADE FOR THE FABRICATION AND INSTALLATION OF THE SECURITY CHAIN.

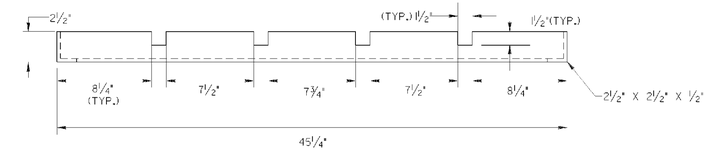

FRAME

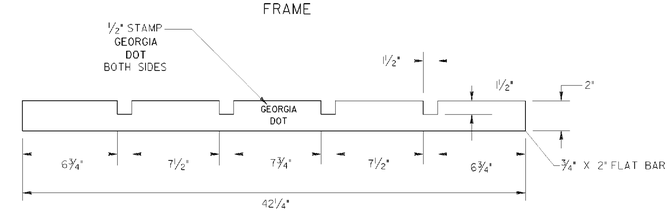

¾" X 2" FLAT BAR (REQ'D)

NOTCH DETAIL

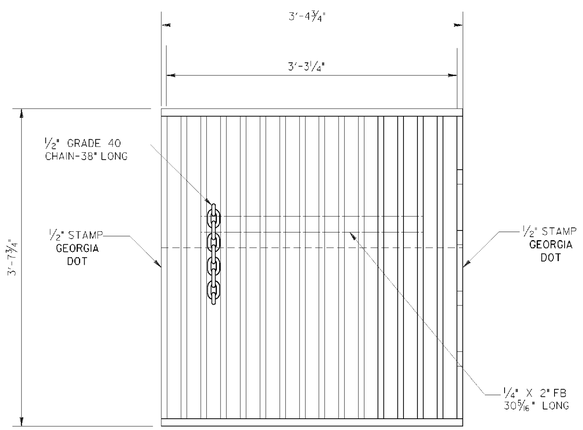

SECURITY CHAIN DETAIL

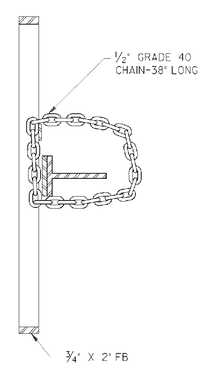

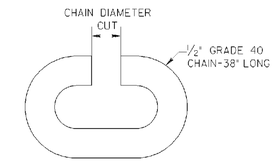

CUT CHAIN LINK DETAIL

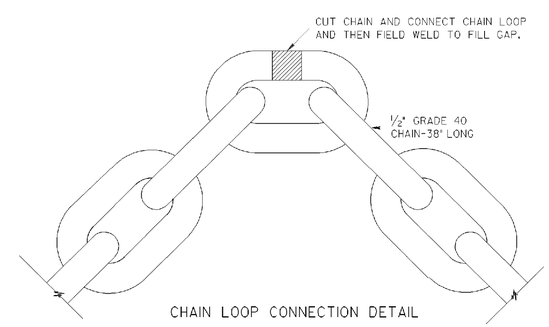

CHAIN LOOP CONNECTION DETAIL

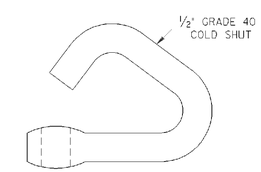

ALTERNATE CHAIN LOOP CONNECTION DETAIL

ADDED CHAIN DETAILS	C.L.O.	6-1-10	DATE
REDRAWN	G.J.P.	5-30-98	
ADD SPECIAL NOTE	R.M.J.	8-15-97	
ADD NOTE 6	R.M.J.	9-19-94	
REVISION	BY		

DEPARTMENT OF TRANSPORTATION
STATE OF GEORGIA

STANDARD
DROP INLET TYPES M-1 & M-2
ADJACENT TO CONCRETE BARRIER

NO SCALE — MAY 1996

DES. W.W.S. (SUBMITTED) STATE DESIGN POLICY ENGINEER
DRW. L.G.S.
TRA. R.M.H.
CHK. B.K.C. (APPROVED) CHIEF ENGINEER

NUMBER 5001M
SHEET 2 OF 2

THE LPA GROUP
TRANSPORTATION CONSULTANTS
A UNIT OF MICHAEL BAKER CORPORATION
3595 ENGINEERING DRIVE
NORCROSS, GEORGIA 30092
(770) 263-9118

REVISION DATES		

STATE OF GEORGIA
DEPARTMENT OF TRANSPORTATION
OFFICE: INNOVATIVE PROGRAM DELIVERY
GEORGIA STANDARDS

DRAWING No. 41-036