RELEASED FOR CONSTRUCTION - 12/05/11

9/29/2006 2:02:38 PM \\GDOT-DSN\GOPLOT\QCF\ga_11f_output.qcf gawens M:\GARY\revised 4961\4961.prf GO-RD6

STATE	PROJECT NUMBER	SHEET NO.	TOTAL SHEETS
GA.			

PRECAST CONCRETE BARRIER DETAILS

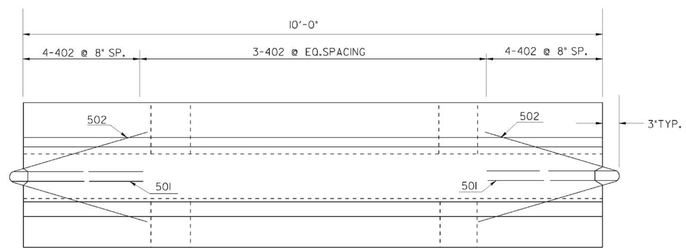

PLAN

NOTE:
BARRIER SECTIONS SHALL BE CONNECTED TOGETHER WITH THE 1¼" DIA. A-307 DOUBLE HEX CONNECTION BOLT. THE BOTTOM NUT & WASHER SHALL BE MAINTAINED BY THE CONTRACTOR FOR THE DURATION OF THE BARRIER INSTALLATION.

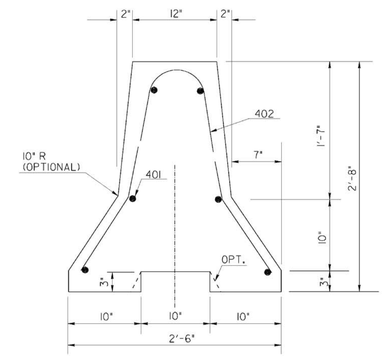

END ELEVATION

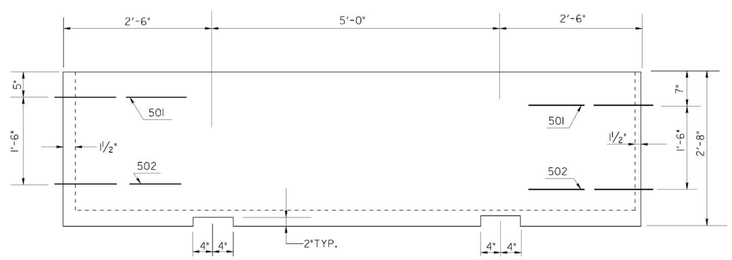

SIDE VIEW

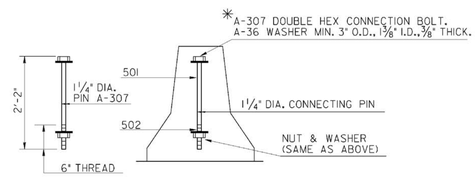

PIN CONNECTION

*AN ALTERNATE CONNECTING PIN WITH A FUSED NUT ON THE TOP THREADED PORTION AND NUT AND WASHER AS SPECIFIED ON THE BOTTOM MAY ALSO BE USED.

GENERAL NOTES:

1-MATERIALS: CLASS 'A' CONCRETE AND 40 STEEL.

2-SEE GA. SPECIFICATIONS FOR BASIS OF PAYMENT AND METHOD NO.__.

3-REINFORCEMENT, HAVING AN AREA AT LEAST EQUAL TO REBARS SHOWN, MAY BE USED AS AN ALTERNATE.

4-BARRIERS SHALL BE PLACED SUCH THAT OPENINGS BETWEEN INDIVIDUAL SECTIONS SHALL BE KEPT TO A MAXIMUM.

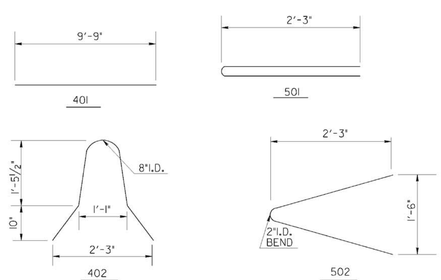

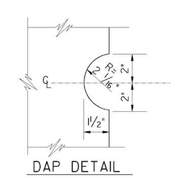

DAP DETAIL

G.L.O.	REV. CONNECTION WASHER AND REV. GEN. NOTE NO. 4.	9-8-06	DEPARTMENT OF TRANSPORTATION STATE OF GEORGIA
	REV. REBAR & PIN CONN.	5-2-01	STANDARD DETAILS OF PRECAST TEMPORARY BARRIERS
R.M.U.	COTTER PIN REQUIREMENT	5-10-96	NO SCALE — AUG., 1995
BY	REVISION	DATE	

DES. ____ DRW. ____ TRA. ____ CHK. ____
(SUBMITTED) STATE ROAD & AIRPORT DESIGN ENGR.
(APPROVED) CHIEF ENGINEER

NUMBER 4961

9/29/2006 2:02:38 PM \\GDOT-DSN\GOPLOT\QCF\ga_11f_output.qcf gawens M:\GARY\revised 4961\4961.prf

THE LPA GROUP
TRANSPORTATION CONSULTANTS
A UNIT OF MICHAEL BAKER CORPORATION
3595 ENGINEERING DRIVE
NORCROSS, GEORGIA 30092
(770) 263-9118

REVISION DATES

STATE OF GEORGIA
DEPARTMENT OF TRANSPORTATION
OFFICE: INNOVATIVE PROGRAM DELIVERY
GEORGIA STANDARDS

DRAWING No. 41-033