AS-BUILT PLANS - 08/30/13

9/15/2024 12:05:45 AM \\GDOT-DSN1\GOP_D_\QCF\QC_ TIFF_OUTPUT.QCF GOWENS \\GDOT-FS02\STANDARDS AND CONSTRUCTION DETAILS\STANDARDS\ENGLISH STANDARDS (.PRF)\1019B.PRF GO-RD6

STATE	PROJECT NUMBER	SHEET NO.	TOTAL SHEETS
GA.			

DROP INLET TYPE V-1
(WITH HOOD)

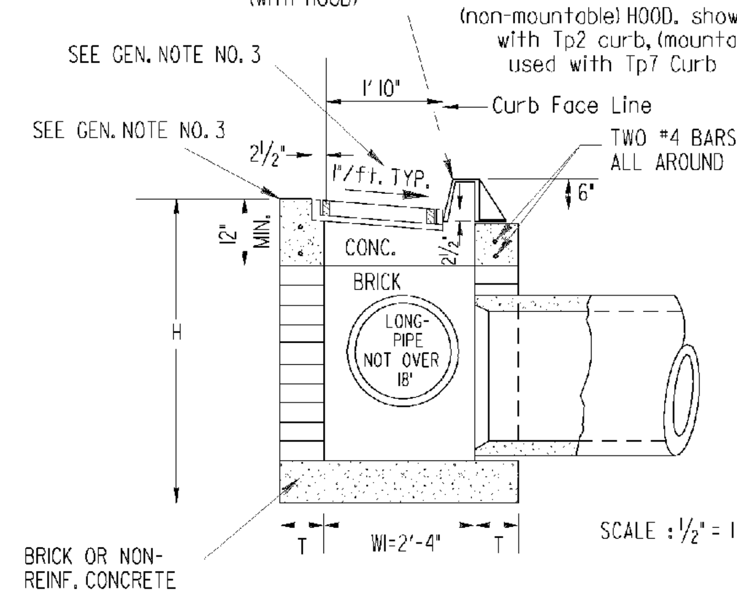

SECTION A-A
(SEE GEN. NOTE NO. 7)

(DROP INLET TYPE V-1 OR TYPE V-2:)
REDUCER SLABS OR BRICK TAPER (bottom left) ARE FOR USE WITH LARGER PIPES, IN GENERAL THIS WILL BE CROSS DRAIN PIPES OVER 24", LONGITUDINAL PIPES OVER 18" (Type V-1) AND LONGITUDINAL PIPES OVER 15" (Type V-2)

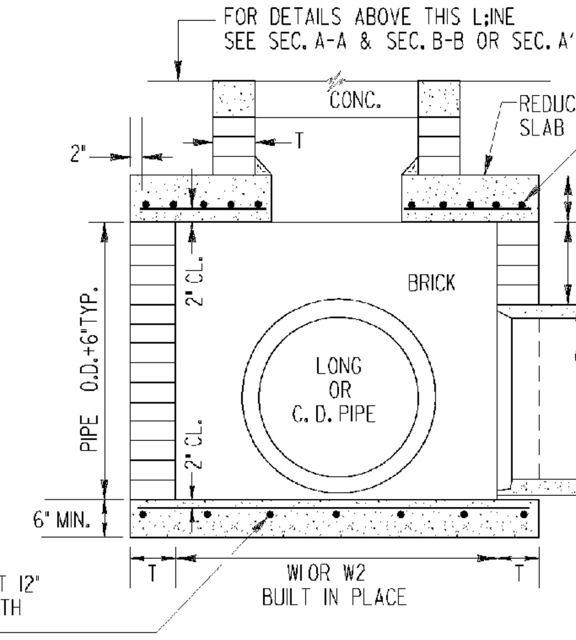

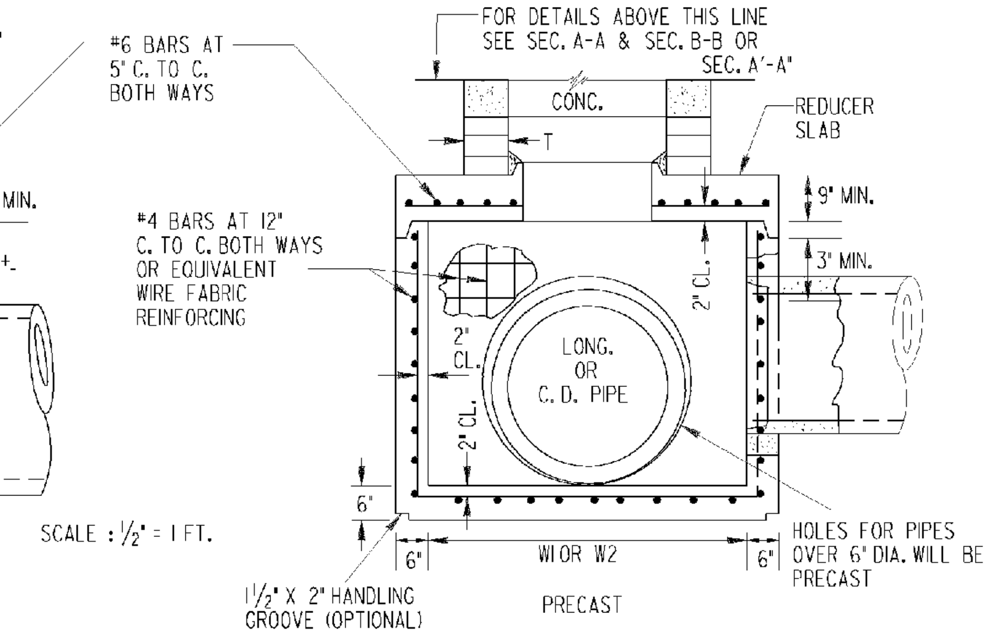

DETAIL OF REDUCING W1 OR W2 DIMENSIONS WITH REDUCER SLAB.

GRATE AND FRAME DETAILS

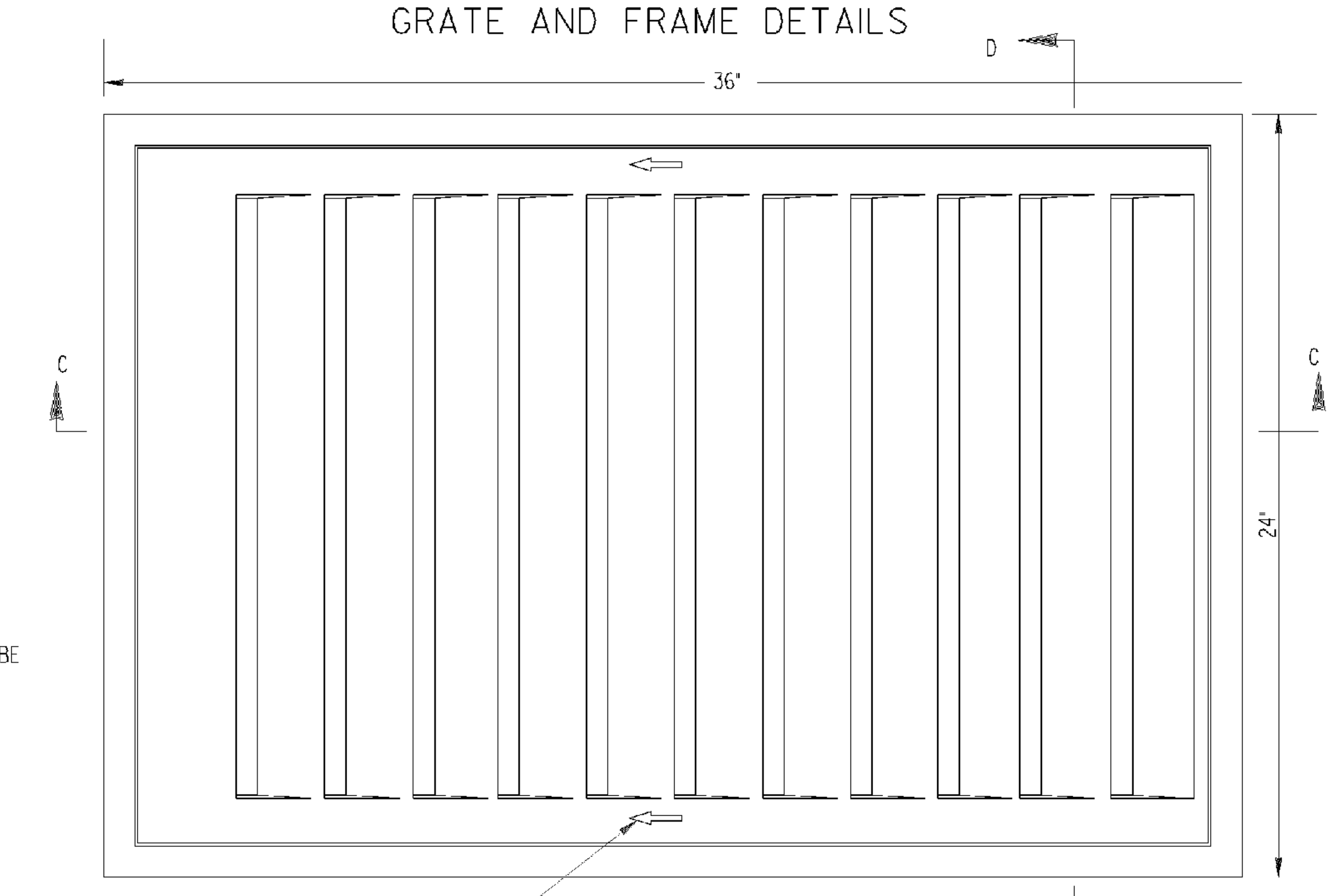

RAISED OR RECESSED ARROWS INDICATE DIRECTION OF HYDRAULIC FLOW. DESIGN OF ARROWS IS MANUFACTURE'S CHOICE.

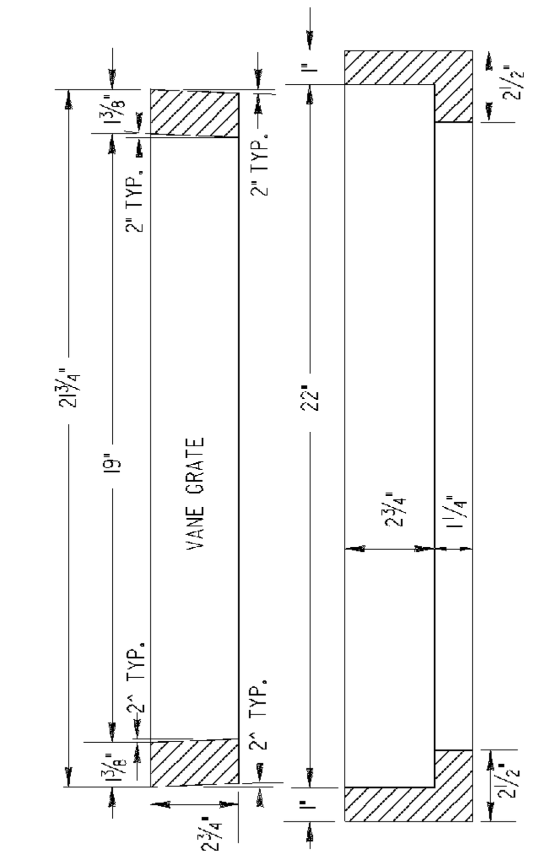

SECTION D-D

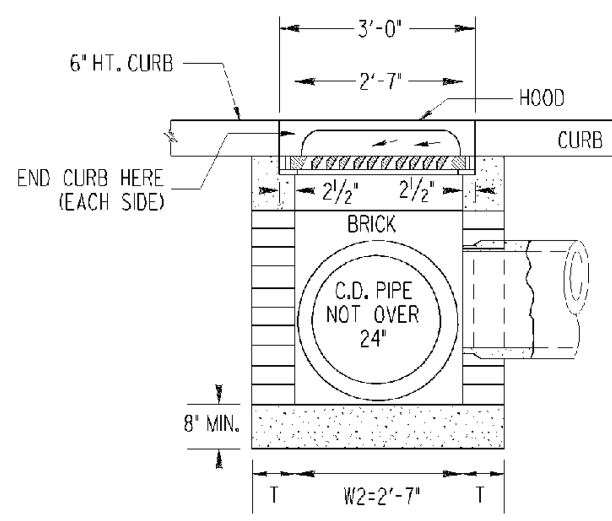

SECTION B-B
SCALE : ½" = 1 FT.

⊕ W1 x W2 NOT LESS THAN 2'-4" x 2'-7" FOR TYPE V-1 AND NOT LESS THAN 1'-8" x 2'-7" FOR TYPE V-2

MINIMUM W1, W2 AND H DIMENSIONS			
PIPE SIZE	W1(MIN.)OR W2(MIN.)		H (MIN.)
	BRICK	REINF. CONC.	
15"	⊕ 1'-8"	⊕ 1'-8"	3'-10"
18"	⊕ 2'-0"	⊕ 2'-0"	4'-2"
24"	2'-7"	2'-7"	4'-9"
30"	3'-4"	3'-6"	5'-10"
36"	3'-10"	4'-0"	6'-5"
42"	4'-5"	4'-6"	7'-0"
48"	5'-0"	5'-0"	7'-10"
54"	5'-7"	5'-6"	8'-5"
60"	6'-2"	6'-0"	9'-0"

NOTE:
THE MINIMUM H DIMENSIONS SHOWN ARE BASED ON TYPICAL OUTSIDE DIAMETERS OF PIPES AND MAY BE MODIFIED WHERE THE ENGINEER OR DESIGNER DETERMINES THAT CONDITIONS PERMIT.
IT IS NOT NECESSARY THAT THE BOX TYPE BASE BE SQUARE. W1 AND W2 DIMENSIONS WILL VARY ACCORDING TO PIPE SIZE.

BRICK WALL THICKNESS	
H	T (MIN.)
TO 10'	8"
10' TO 20'	12"
20' TO 30'	16"

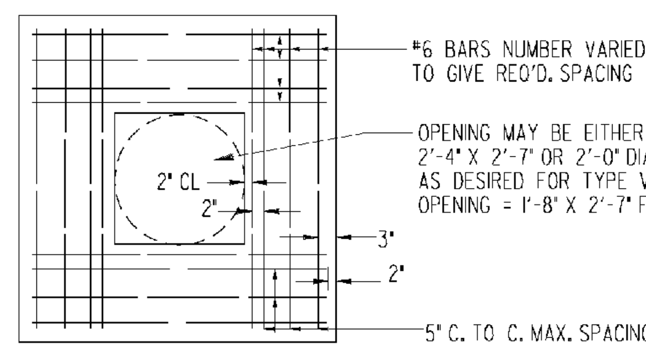

PLAN OF REINFORCING IN REDUCER SLAB

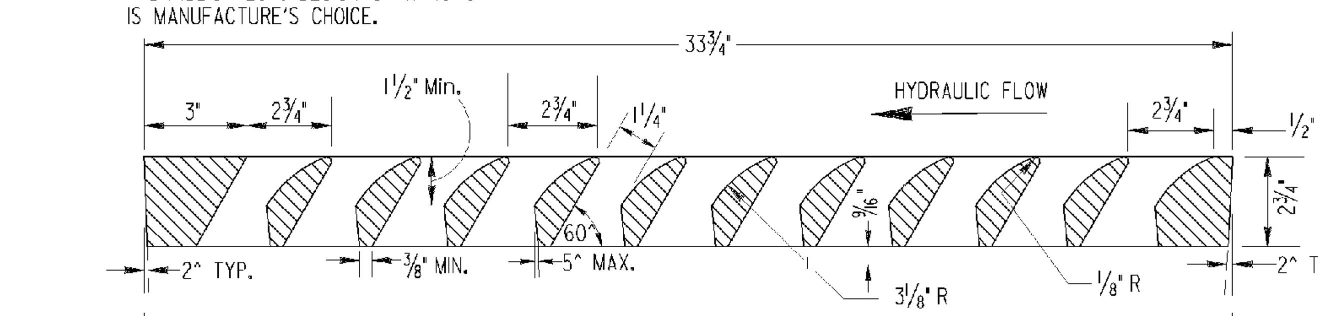

MATERIAL FOR GRATE: GRAY IRON, A.S.T.M. A-48 CLASS 30.

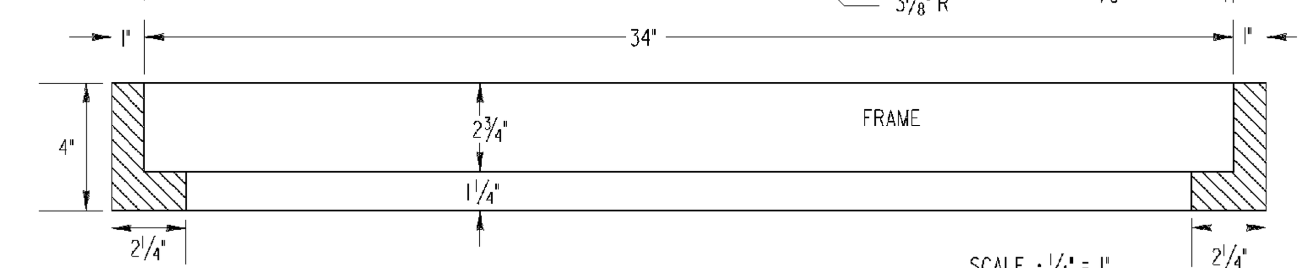

SECTION C-C

NOTE:
FRAME IS SAME AS GA. STD. 1010 OR CITY OF ATLANTA FRAME. TYPE B

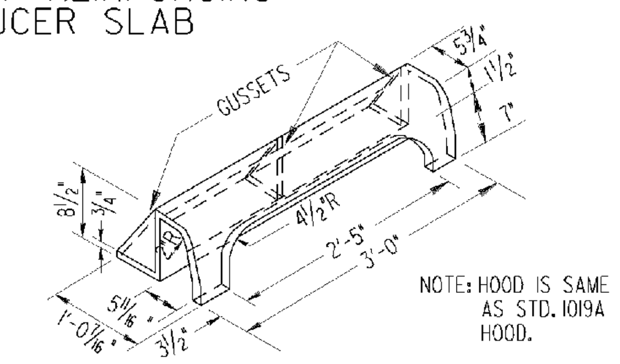

DETAIL OF ✱HOOD (non-mountable) (use with Tp2 Curb)

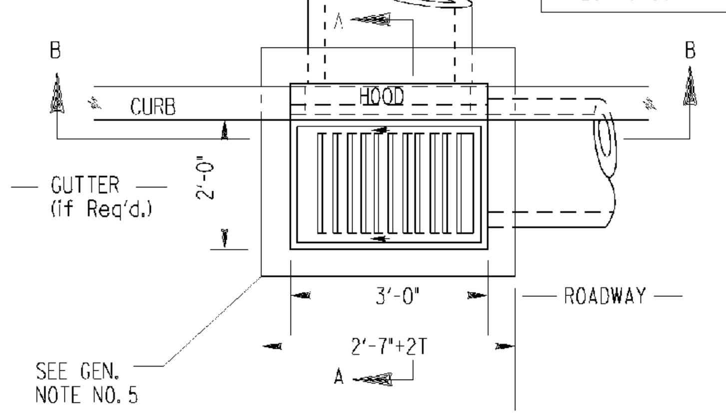

PLAN VIEW
SCALE : ½" = 1 FT.

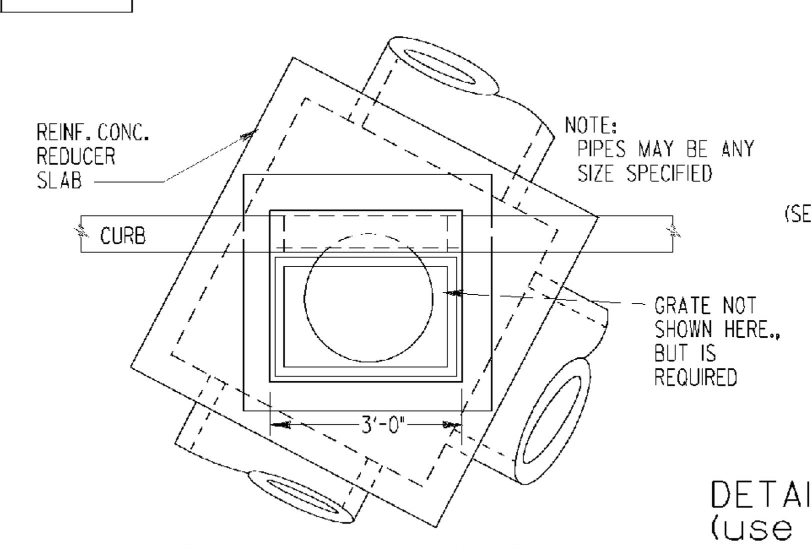

TYPICAL PLAN VIEW WITH SKEWED PIPES

(SEE GEN. NOTE NO. 7)

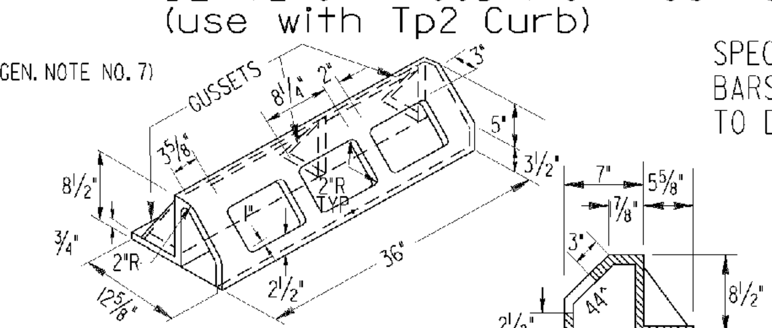

DETAIL OF ✱HOOD (mountable) (use with Tp7 Curb)

✱ CONTRACTOR SHALL SPECIFY EITHER MOUNTABLE OR NON-MOUNTABLE TO FOUNDRY IF HOOD IS REQUIRED.

SPECIAL NOTE:
BARS OF GRATE WILL BE PERPENDICULAR TO DIRECTION OF TRAFFIC FLOW.

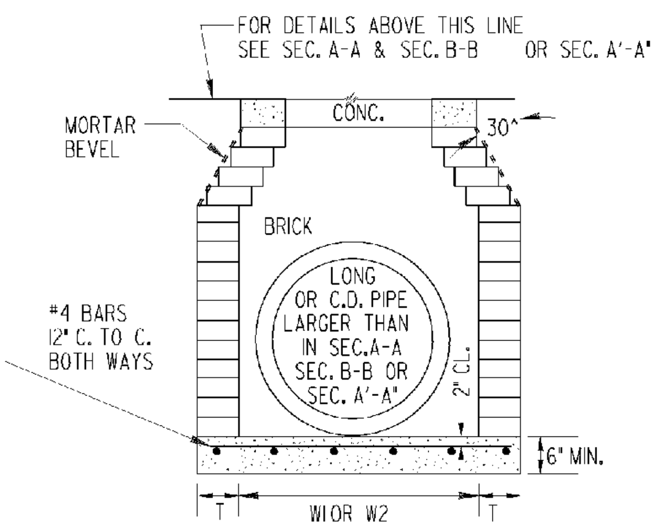

ALTERNATE-REDUCTION OF W1 OR W2 DIMENSIONS WITH BRICK MASONRY
SCALE : ½" = 1 FT.

MINIMUM H DIMENSIONS (FOR DETAIL AT LEFT)	
PIPE SIZE	H (MIN.)
18"	4'-2"
24"	4'-9"
30"	5'-9"
36"	6'-9"
42"	7'-10"
48"	8'-11"
54"	10'-0"
60"	11'-2"

"E"= 8" FOR DROP INLET TYPE V-1
"E"=1'-0" FOR DROP INLET TYPE V-2

SEE STANDARD 1040 FOR ADDITIONAL DETAILS

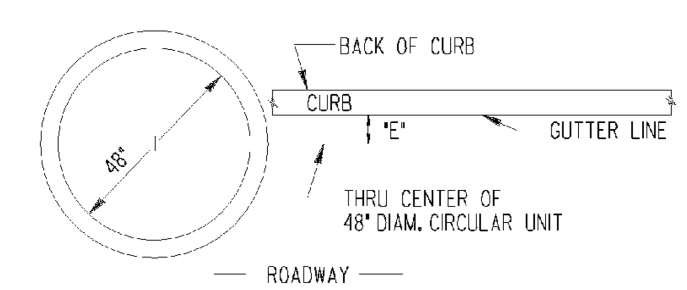

NOTE: STD. 1040 ALTERNATE PERMITTED WITH ANY PIPE SIZE OR SKEW.

ALTERNATE - STANDARD 1040 CIRCULAR SECTIONS - PLAN VIEW LOCATION.
NO SCALE

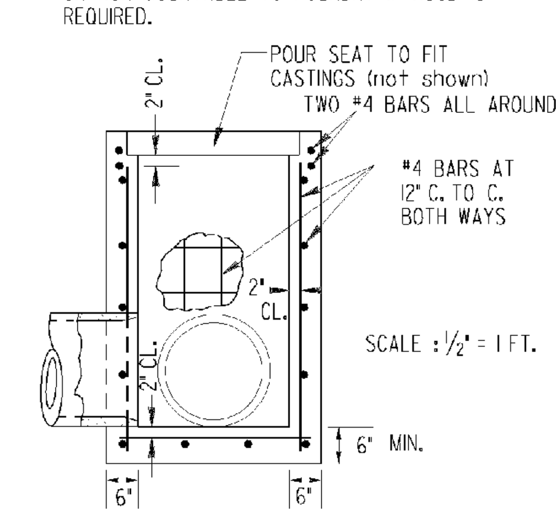

ALTERNATE- CAST-IN-PLACE REINFORCED CONCRETE

DROP INLET TYPE V-2
(without hood)

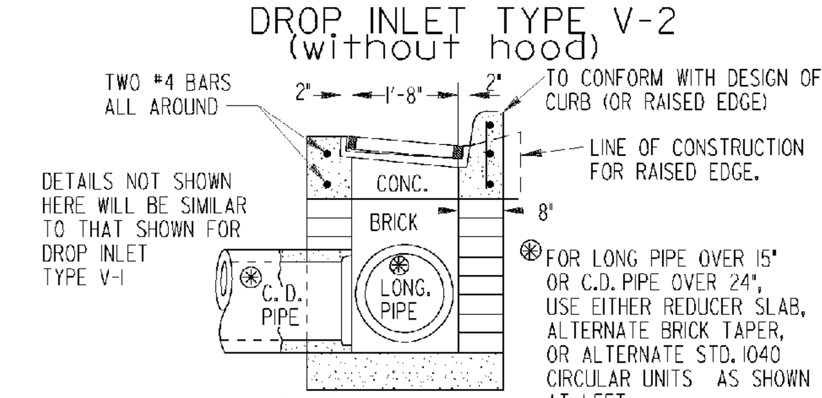

SECTION A'-A'

⊛ FOR LONG PIPE OVER 15" OR C.D. PIPE OVER 24", USE EITHER REDUCER SLAB, ALTERNATE BRICK TAPER, OR ALTERNATE STD. 1040 CIRCULAR UNITS AS SHOWN AT LEFT.

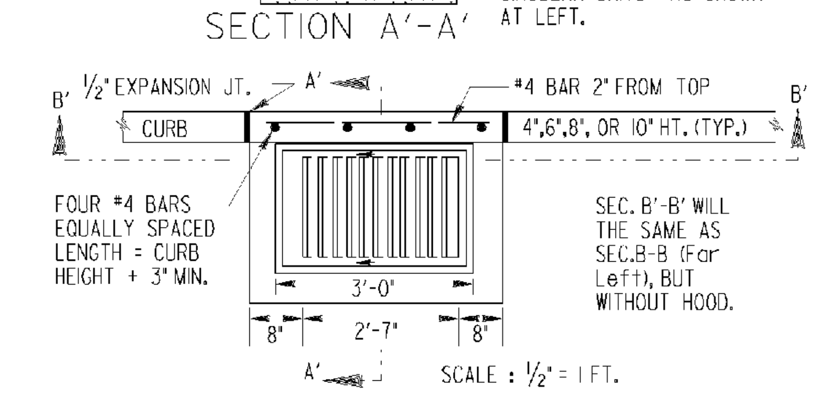

PLAN VIEW
SCALE : ½" = 1 FT.

GENERAL NOTES:

1. SPECIFICATIONS: GEORGIA STANDARD AND/OR SPECIAL PROVISIONS EXCEPT THAT VANE GRATE WILL BE GRAY IRON A.S.T.M. A-48 CLASS 30.
2. ALIGNMENT, NUMBER AND SIZES OF PIPES SHOWN ARE ONLY TYPICAL. SEE PLANS FOR ACTUAL PIPE CULVERT REQUIREMENTS.
3. SLOPE OF GRATE WILL MATCH GUTTER SLOPE WHEN USED WITH CURB AND GUTTER. SLOPE OF GRATE WILL MATCH ROADWAY SLOPE, WHERE THERE IS NO GUTTER (I.E., HEADER CURB, INTEGRAL CURB, ETC.). TOP OF HOOD WILL BE FLUSH WITH TOP OF CURB FOR TYPE V-1.
4. CONCRETE WILL BE CLASS "A" CONCRETE.
5. ½" EXPANSION JOINTS WILL BE REQUIRED IF RIGID PAVEMENT, SIDEWALK OR CONCRETE GUTTER MEETS DROP INLETS.
6. ALL STRUCTURES OVER 4 FT. DEEP SHALL REQUIRED STEPS OF A TYPE APPROVED BY THE MATERIALS LABORATORY OR ¾" DIA. BARS STEPS AS SHOWN FOR OTHER INLET TYPES. NUMBER AND LOCATION OF STEPS SHALL BE AS DIRECTED BY THE ENGINEER.
7. METAL HOODS DO NOT IMPROVE HYDRAULICS OF INLETS. TYPE V-1DROP INLETS ARE NORMALLY USED TO PROVIDE CONTINUITY OF CURB OR TO ALLOW LARGER BOX WITHOUT TAPER OR REDUCER SLAB.

DEPARTMENT OF TRANSPORTATION
STATE OF GEORGIA

STANDARD

DROP INLET TYPES
V-1 AND V-2

SCALE AS SHOWN AUGUST, 1999

DATE / REVISION / BY
DES. ____ DRW. ____ TRA. CHK.
(SUBMITTED) James A. Kennel — STATE ROAD & AIRPORT DESIGN ENGR.
(APPROVED) — CHIEF ENGINEER

NUMBER 1019B