RELEASED FOR CONSTRUCTION - 12/05/11

STATE	PROJECT NUMBER	SHEET NO.	TOTAL SHEETS
GA.			

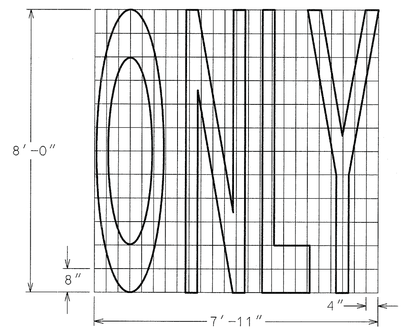

TYPE 1
AREA = 20.8 FT^2

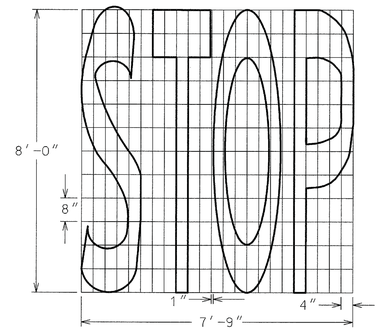

TYPE 2
AREA = 25.4 FT^2

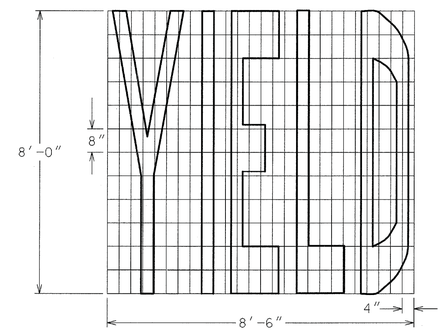

TYPE 15
AREA = 25.4 FT^2

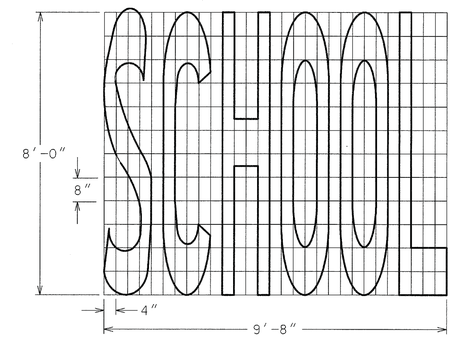

TYPE 3A
(SINGLE LANE)
AREA = 33.5 FT^2

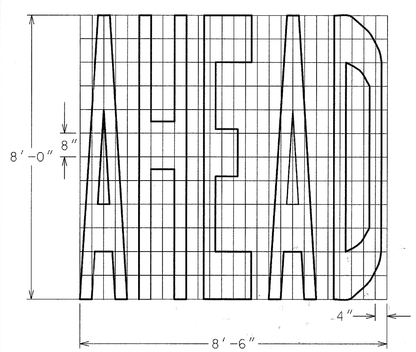

TYPE 4
AREA = 29.1 FT^2

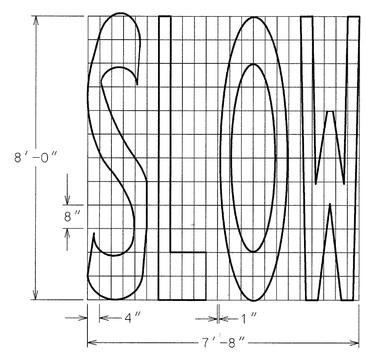

TYPE 5
AREA = 25.4 FT^2

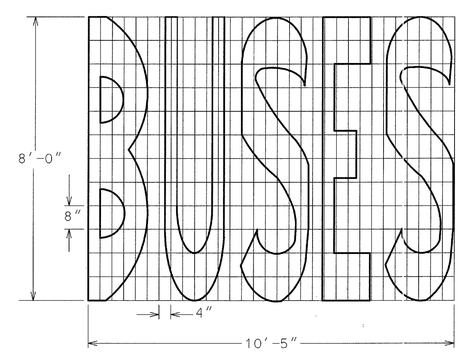

TYPE 6
AREA = 38.1 FT^2

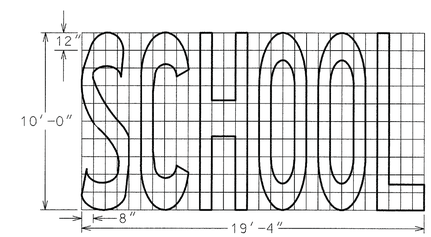

TYPE 3B
(TWO LANES)
AREA = 85.0 FT^2

DATE	REVISIONS

GEORGIA DEPARTMENT OF TRANSPORTATION
OFFICE OF TRAFFIC SAFETY & DESIGN

DETAILS OF
PAVEMENT MARKING WORDS
SHEET 1 OF 2

NO SCALE JANUARY 2000

PCBDTB

T-13A

THE LPA GROUP
TRANSPORTATION CONSULTANTS
3595 ENGINEERING DRIVE
NORCROSS, GEORGIA 30092
(770) 263-9118

REVISION DATES

STATE OF GEORGIA
DEPARTMENT OF TRANSPORTATION
OFFICE: INNOVATIVE PROGRAM DELIVERY
CONSTRUCTION DETAILS

DRAWING No.
40-037

3/1/2007 GPLN