AS-BUILT PLANS - 08/30/13

STATE	PROJECT NUMBER	SHEET NO.	TOTAL SHEETS
GA.			

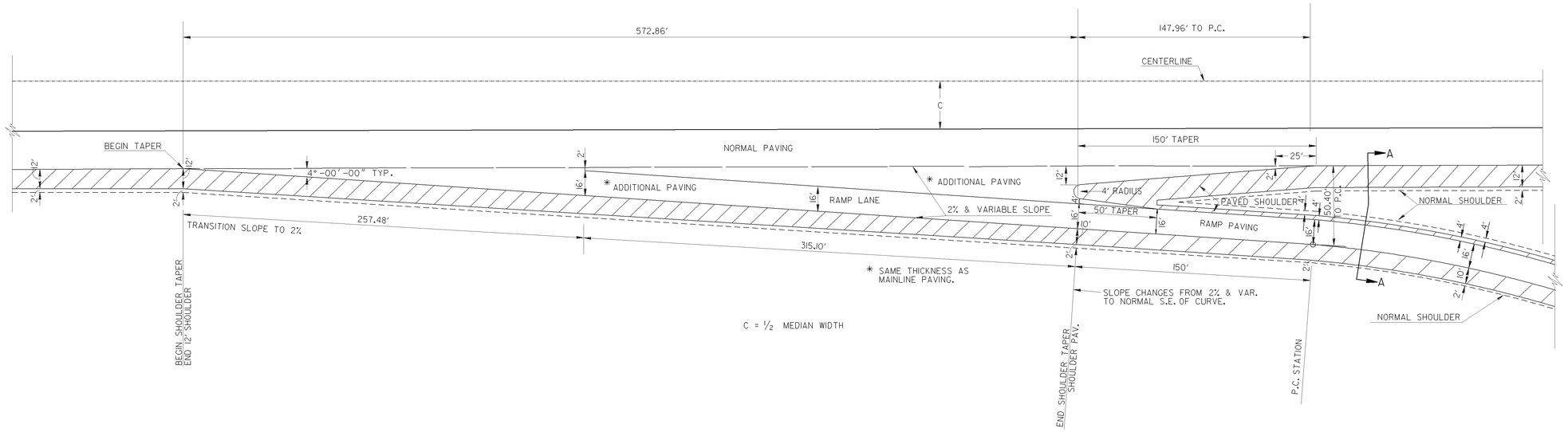

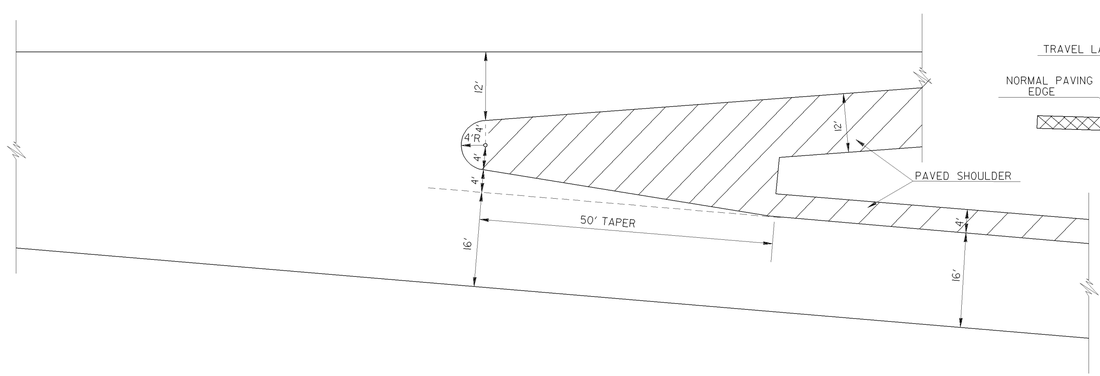

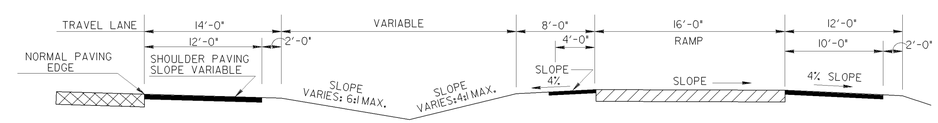

SECTION A-A

DATE	REVISION	BY

DEPARTMENT OF TRANSPORTATION
STATE OF GEORGIA

CONSTRUCTION DETAIL

DETAIL OF EXIT RAMPS FOR INTERCHANGES

NO SCALE REDRAWN APRIL 2011

NUMBER R-2

THE LPA GROUP
TRANSPORTATION CONSULTANTS
3595 ENGINEERING DRIVE
NORCROSS, GEORGIA 30092
(770) 263-9118

REVISION DATES		

STATE OF GEORGIA
DEPARTMENT OF TRANSPORTATION
OFFICE: INNOVATIVE PROGRAM DELIVERY
CONSTRUCTION DETAILS

DRAWING No. 40-015