AS-BUILT PLANS - 08/30/13

STATE	PROJECT NUMBER	SHEET NO.	TOTAL SHEETS
GA.			

NOTE:
GRATE SHOWN BELOW SHALL NOT BE USED WHERE BICYCLES ARE PERMITTED. SEE CONSTRUCTION DETAIL D-33B FOR BICYCLE GRATE.

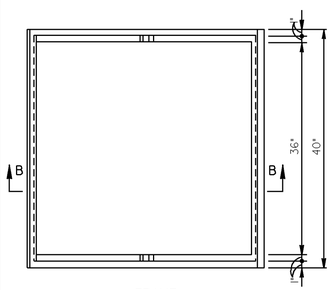

FRAME

SECTION C-C

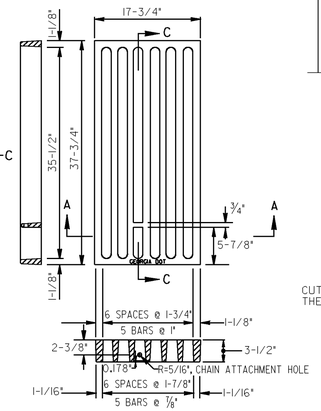

SECTION A-A

GRATE - 2 EACH REQUIRED

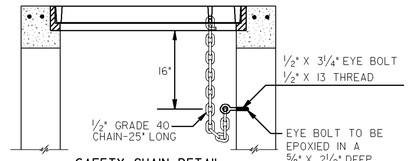

SAFETY CHAIN DETAIL
2-1/2" GRADE 40 CHAINS-25" LONG
2-1/2" X 3 1/4" EYE BOLT
EACH GRATE REQUIRES CHAIN AND EYE BOLT INSTALLED

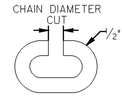

CUT CHAIN LINK DETAIL
CUT CHAIN AND CONNECT CHAIN AND THEN FIELD WELD TO FILL GAP.

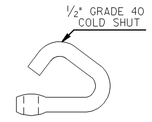

ALTERNATE CHAIN LOOP CONNECTION DETAIL

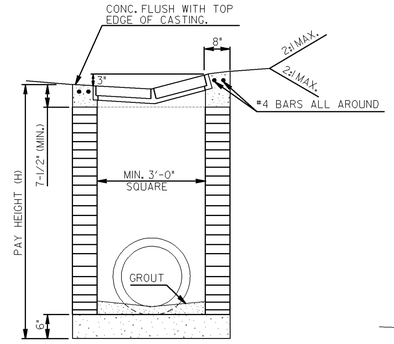

TYPE "V" INLET
(PIPE TO 30" TYP.)

MIN. H FOR PIPES TO 30"	
PIPE SIZE	MIN. "H"
15"	3'-9"
18"	4'-2"
24"	4'-9"
30"	5'-4"

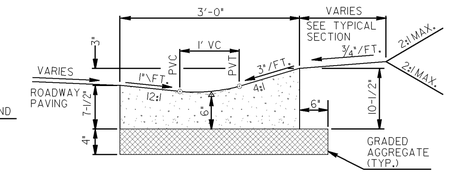

1. CONCRETE SHALL BE CLASS "A", OR PER SECTION 441.
2. BASIS OF PAVEMENT: CONCRETE "V" GUTTER PER LIN. FT.

SPECIAL DESIGN
"V" GUTTER DESIGN

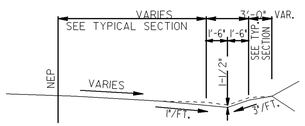

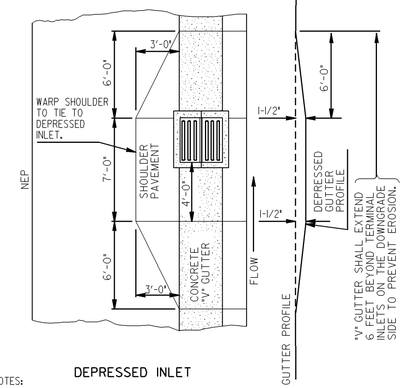

DEPRESSED INLET

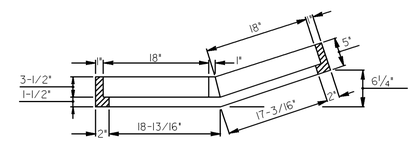

SECTION B-B

NOTE:
FRAME AND GRATE SHALL BE GRAY IRON DRAINAGE CASTINGS. SEE GEORGIA D.O.T. STANDARD SPECIFICATIONS 854.

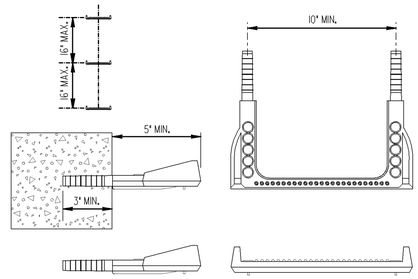

NOTE:
STEPS ARE REQUIRED IN ALL INLETS OVER 4 FT IN HEIGHT. STEPS WILL BE ALIGNED TO FORM A CONTINUOUS LADDER WITH RUNGS AT 16" MAXIMUM SPACINGS. THE CONTRACTOR WILL USE ONLY STEPS LISTED IN THE GA. D.O.T. OFFICE OF MATERIALS AND RESEARCH "QUALIFIED PRODUCTS LIST".

STEPS

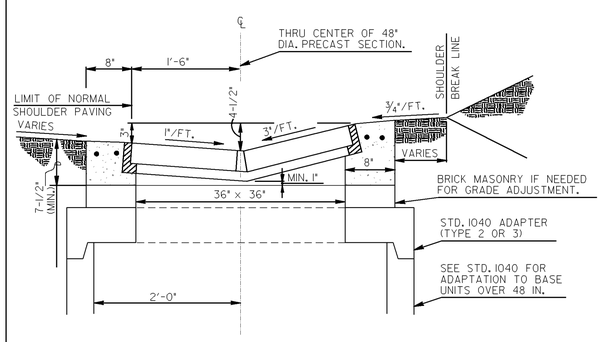

CIRCULAR PRECAST ALTERNATE

THICKNESS OF BRICK WALLS	
DEPTH	THICKNESS
0'-10'	8"
10'-20'	12"
OVER 20'	16"

MIN. H FOR PIPES OVER 30"		
PIPE SIZE	W *	MIN. H
36'	4'-0"	6'-6"
42"	4'-8"	7'-8"
48"	5'-0"	8'-2"
54"	5'-6"	9'-9"
60"	6'-6"	11'-9"

* W TO BE INCREASED WHERE NECESSARY TO ACCOMODATE LARGER PIPES OR PIPES ON SKEWS WITH MINIMUM H INCREASED ACCORDINGLY.

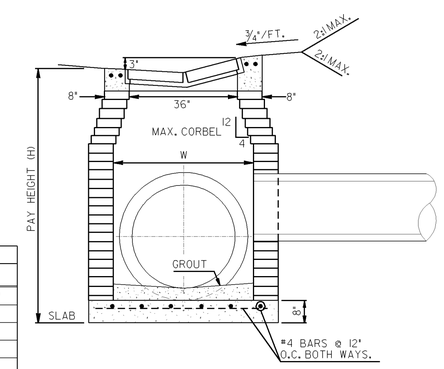

DETAIL FOR EXTRA WIDTH TYPE "V" INLETS WHERE REQUIRED TO ACCOMODATE PIPES LARGER THAN 30" (TYPICAL) OR SKEWED PIPES

TYPE "V" INLET

GENERAL NOTES:

1. SEE SECTION 668, OF GEORGIA D.O.T. STANDARD SPECIFICATIONS FOR MATERIALS, CONSTRUCTION DETAILS, MEASUREMENTS, & PAYMENT FOR THIS STRUCTURE, EXCEPT AS NOTED.
2. ALL CONCRETE SHALL BE CLASS "A" FOR BUILT-IN-PLACE INLET CONSTRUCTION. CONCRETE FOR "V" GUTTER MAY BE EITHER CLASS "A" OR PER SECTION 441. THE COST OF THE "V" GUTTER WILL BE INCLUDED IN THE OVERALL BID PRICE FOR CONCRETE V GUTTER.
3. IF "V" GUTTER INLET SYSTEM IS TERMINATED IN SAG OR LOW AREA, AN EXTENSION OF THE GUTTER PAST LOWEST INLET OR OTHER APPROVED EROSION PROTECTION SHALL BE PROVIDED.
4. CONSTRUCTION ALTERNATES FOR INLETS SHALL BE:
   (A) BRICK MASONRY AS SHOWN;
   (B) CIRCULAR PRECAST (SEE BOTTOM LEFT & STD. 1040.)
   (C) REINFORCED CONCRETE (SEE STD. 1019-A.)
5. MINIMUM INLET DIMENSIONS GIVEN IN THE TABLES ARE TYPICAL FOR CONCRETE PIPE AND MAY BE ADJUSTED WHERE SPECIFIED BY EITHER THE DESIGNER OR THE ENGINEER.
6. THE COST OF THE STEPS AND INSTALLATION OF CHAINS AND EYE BOLTS SHALL BE INCLUDED IN THE OVERALL BID PRICE FOR DROP INLET.

BY	REVISION	DATE
GLO	ADDED SAFETY CHAIN DETAIL & REV. STEP DETAIL	4-4-11
GLO	REV. GEN. NOTE NO. 6 REV. GEN. NOTE NUMBER 2. GENERAL REVISION	7-09-07 6-14-90

DEPARTMENT OF TRANSPORTATION
STATE OF GEORGIA

CONSTRUCTION DETAILS
TYPE "V" INLET
"V" GUTTER DETAILS

NO SCALE

NUMBER
D-33

THE LPA GROUP
TRANSPORTATION CONSULTANTS
3595 ENGINEERING DRIVE
NORCROSS, GEORGIA 30092
(770) 263-9118

REVISION DATES

STATE OF GEORGIA
DEPARTMENT OF TRANSPORTATION
OFFICE: INNOVATIVE PROGRAM DELIVERY
CONSTRUCTION DETAILS

DRAWING No.
40-008