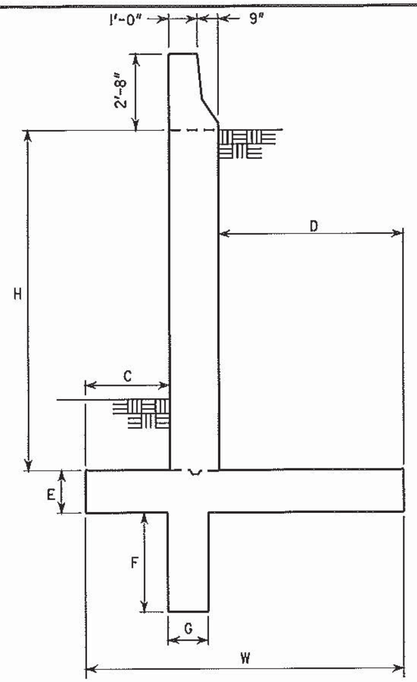


FILL WALL

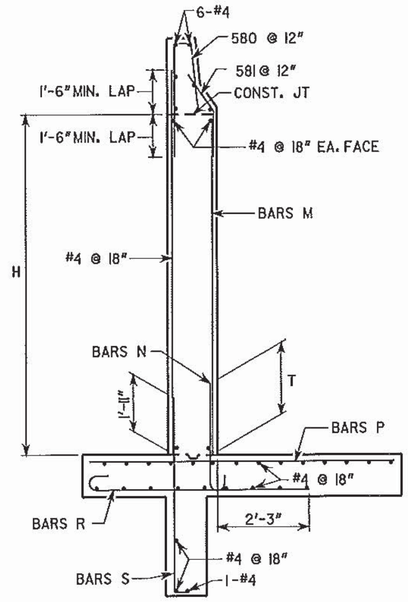


FILL WALL - REINFORCING

CAST IN PLACE FILL WALL

| WALL | DIMENSIONS MAX. H | C | D | E | F | G | W | REINFORCING M | N | P | R | S | MIN. LAP T | Δ (IN) |
|---|---|---|---|---|---|---|---|---|---|---|---|---|---|---|
| 2A | 11'-0" | 2'-3" | 6'-0" | 1'-3" | 2'-0" | 1'-0" | 10'-0" | #8 @ 12" | #8 @ 12" | #8 @ 12" | #6 @ 11" | #5 @ 10" | 5'-0" | 0 |
| 2B | 8'-0" | 2'-0" | 4'-9" | 1'-0" | 1'-3" | 1'-0" | 8'-6" | #8 @ 12" | #8 @ 12" | #6 @ 10" | #5 @ 10" | #5 @ 10" | 5'-0" | 0 |
| 2C | 12'-6" | 2'-9" | 6'-0" | 1'-6" | 2'-9" | 1'-0" | 10'-6" | #8 @ 12" | #8 @ 12" | #7 @ 10" | #7 @ 12" | #5 @ 10" | 5'-0" | 1/8" |
| 7 | 9'-6" | 2'-3" | 5'-0" | 1'-0" | 1'-9" | 1'-0" | 9'-0" | #8 @ 12" | #8 @ 12" | #7 @ 11" | #5 @ 10" | #5 @ 10" | 5'-0" | 0 |
| 8 | 5'-3" | 1'-9" | 4'-0" | 1'-0" | NA | NA | 7'-6" | #8 @ 12" | #8 @ 12" | #5 @ 10" | #5 @ 10" | #5 @ 10" | 5'-0" | 0 |
| 9 | 12'-6" | 2'-9" | 6'-0" | 1'-6" | 2'-9" | 1'-0" | 10'-6" | #8 @ 12" | #8 @ 12" | #7 @ 10" | #7 @ 12" | #5 @ 10" | 5'-0" | 1/8" |

CAST IN PLACE CUT WALL

| WALL 4 & 5 | DIMENSIONS MAX. H | A | B | C | D | E | W | REINFORCING M | N | P | R | S | MIN. LAP T | Δ (IN) |
|---|---|---|---|---|---|---|---|---|---|---|---|---|---|---|
| DESIGN 1 | 6'-0" | 1'-3" | 2'-5" | 1'-0" | 2'-6" | 1'-0" | 4'-6" | #5 @ 12" | #5 @ 12" | #5 @ 10" | #5 @ 10" | #5 @ 10" | 2'-2" | 1/8" |
| DESIGN 2 | 7'-6" | 1'-3" | 3'-5" | 1'-0" | 3'-3" | 1'-0" | 5'-6" | #5 @ 10" | #5 @ 10" | #5 @ 10" | #5 @ 10" | #5 @ 10" | 2'-2" | 1/4" |
| DESIGN 3 | 9'-6" | 1'-3" | 4'-11" | 1'-0" | 4'-3" | 1'-0" | 7'-0" | #8 @ 12" | #8 @ 12" | #7 @ 11" | #5 @ 10" | #5 @ 10" | 5'-0" | 3/8" |

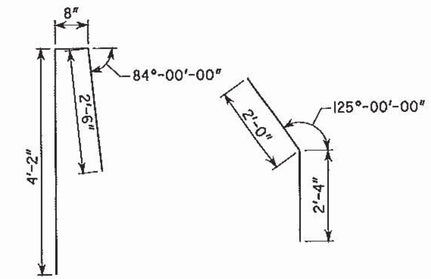


580
TYPE 23

581
TYPE 4

⊛ AT CONTRACTOR'S OPTION, 10" RADIUS MAY BE REPLACED BY STRAIGHT INTERSECTING SLOPES.

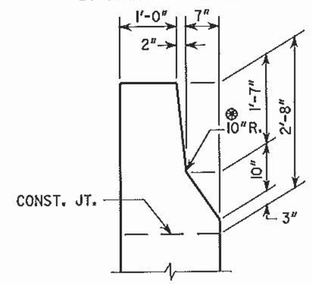


BARRIER SHAPE DETAIL

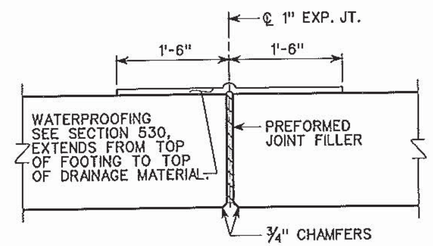


DETAIL OF EXPANSION JOINT

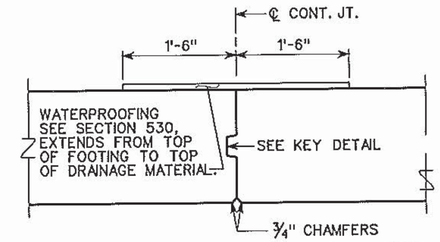


DETAIL OF CONTRACTION JOINT

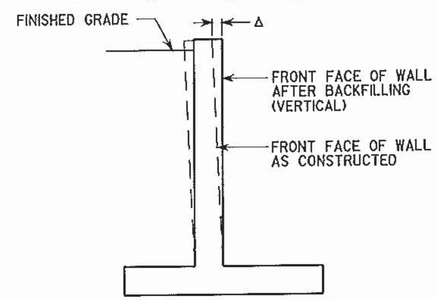


WALL BATTER DETAIL

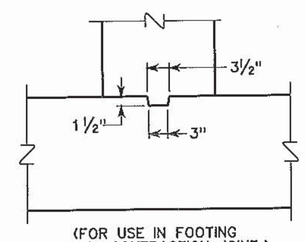


(FOR USE IN FOOTING AND CONTRACTION JOINT.)

SHEAR KEY DETAIL

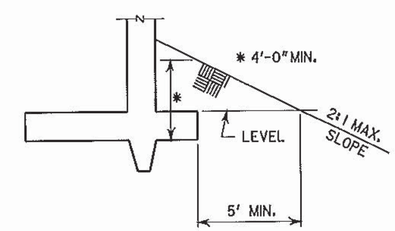


DETAIL FOR SLOPE IN FRONT OF FILL WALL

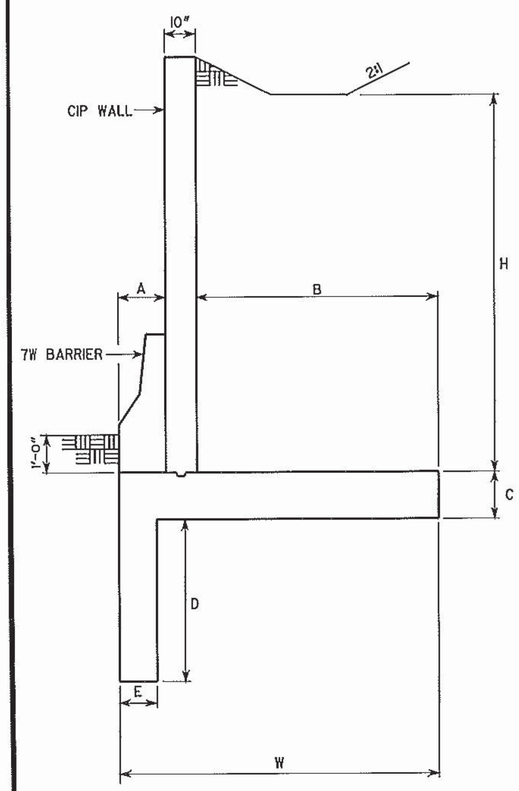


CUT WALL

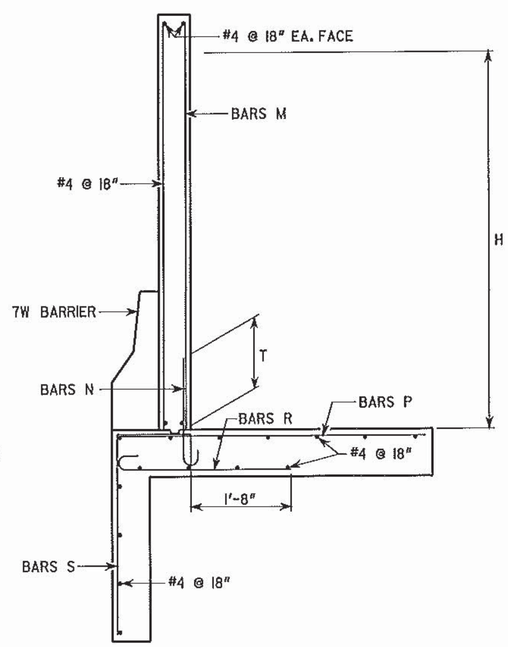


CUT WALL - REINFORCING

NOTES:

1. PLACE WEEPHOLES AND DRAINAGE MATERIAL AS SHOWN ON GA. STD. 9031L.
2. PROVIDE 1" EXPANSION JOINTS IN WALL STEM, FOOTING AND KEY AT A MAXIMUM SPACING OF 100'. SPACE EXPANSION JOINTS UNIFORMLY. STOP ALL LONGITUDINAL REINFORCEING STEEL IN THE STEM, FOOTING AND KEY 3" CLEAR OF THE EXPANSION JOINTS.
3. SPACE CONTRACTION JOINTS IN WALL STEM AT 30' MAXIMUM AND 20' MINIMUM. STOP ALL LONGITUDINAL REINFORCING STEEL IN THE STEM 2" CLEAR OF THE CONTRACTION JOINTS.
4. WATERPROOF EXPANSION AND CONTRACTION JOINTS IN THE WALL STEM ON THE BACK SIDE. EXTENT OF WATERPROOFING SHALL BE FROM TOP OF DRAINAGE MATERIAL TO THE TOP OF FOOTING FOR 1'-6" MINIMUM EACH SIDE OF JOINT. SEE SECTION 530 OF THE GEORGIA DOT SPECIFICATIONS.
5. PLACE AND TIE ALL REINFORCING STEEL IN ACCORDANCE WITH THE GEORGIA DOT SPECIFICATIONS. DO NOT WELD REINFORCING STEEL.
6. MAINTAIN 2" COVER ON ALL REINFORCING STEEL IN THE STEM AND 3" COVER IN THE FOOTING AND KEY.
7. BACKFILL - PLACE BACKFILL ON FRONT FACE SIDE OF WALL BEFORE BACKFILLING BACK FACE SIDE OF WALL.
8. SEE PLAN AND ELEVATIONS SHEETS FOR DESIGN DETAILS.
9. PROVIDE TEMPORARY SHORING AS NECESSARY FOR WALL CONSTRUCTION.

WALL NO. 1, 2, 4, 5, 6, 7, 8, & 9

THE LPA GROUP
A UNIT OF MICHAEL BAKER CORPORATION
THE LPA GROUP INCORPORATED
TRANSPORTATION CONSULTANTS
3595 ENGINEERING DRIVE
NORCROSS, GEORGIA 30092
(770) 263-9118

GEORGIA
DEPARTMENT OF TRANSPORTATION
ENGINEERING DIVISION-OFFICE OF BRIDGES AND STRUCTURES

CIP WALL SECTIONS
I-20 CD LANES
DEKALB COUNTY 0009542

SCALE: NONE DECEMBER 2011

DESIGNED BSB CHECKED ANZ REVIEWED WEI/WMD
DRAWN BSB DESIGN GROUP AWB APPROVED BFR

DATE | REVISIONS | BY

DRAWING NO. 31-26
WALL SHEET 1 OF 1