RELEASED FOR CONSTRUCTION: 12/05/11

STATE	PROJECT NUMBER	SHEET NO.	TOTAL SHEETS
GA.	0009542	465	759

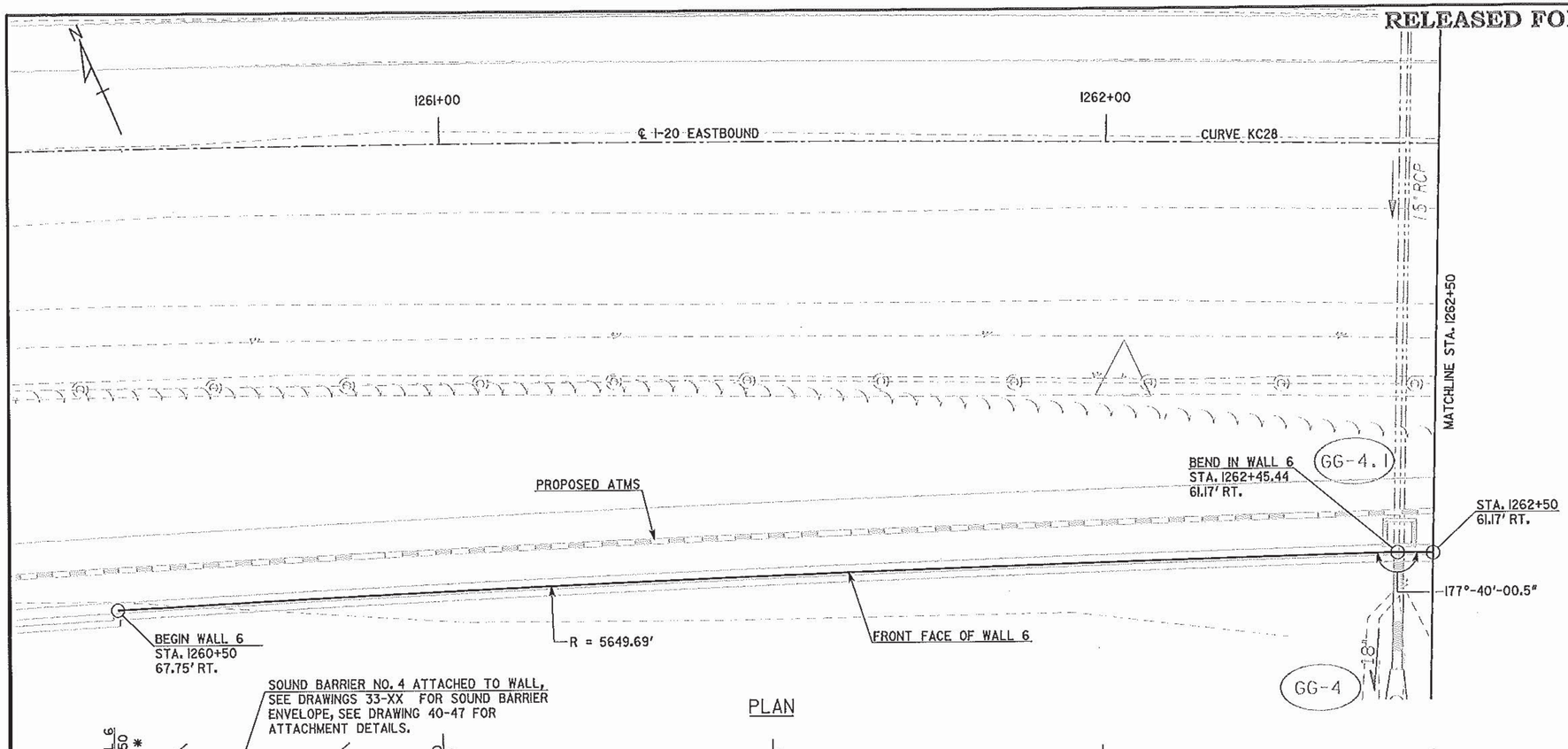

PLAN

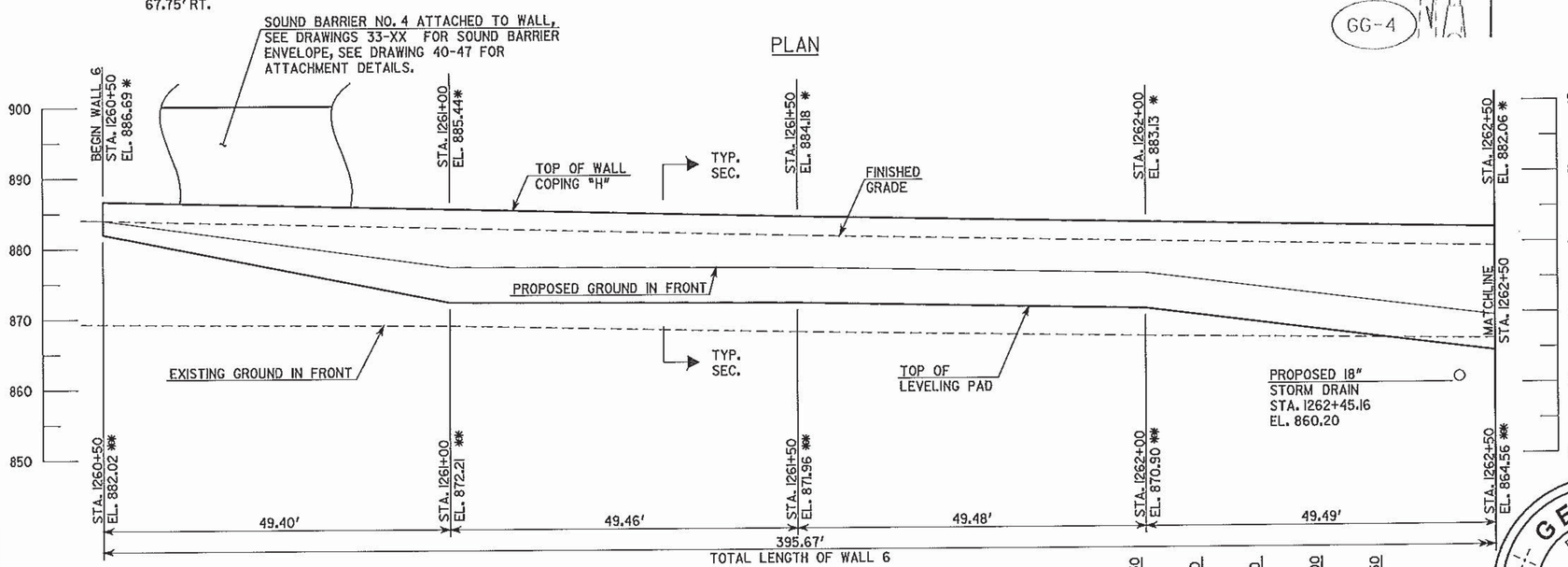

ELEVATION

LOOKING AT FRONT FACE OF WALL

PVI STA. 1260+50	PVI STA. 1261+00	PVI STA. 1261+50	PVI STA. 1262+00	PVI STA. 1262+50
EL. 886.19	EL. 884.94	EL. 883.68	EL. 882.45	EL. 881.25
-2.500%	-2.520%	-2.470%	-2.410%	

PROFILE GRADE DATA

I-20 EASTBOUND CD

WALL NO. 6 DESIGN DATA

DESIGN BEARING PRESSURE	3000 PSF
COHESION	0 PSF
ANGLE OF INTERNAL FRICTION	28°
UNIT WEIGHT	120 PCF
COEFFICIENT OF SLIDING FRICTION	0.35

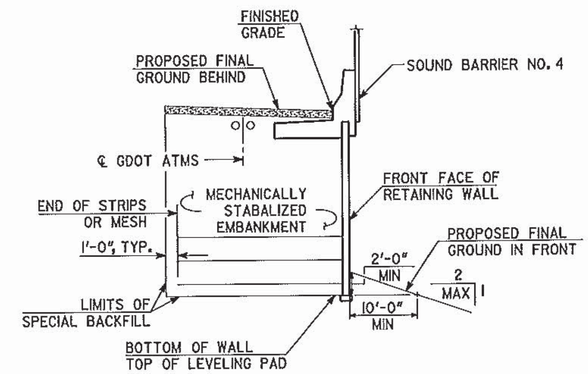

TYPICAL SECTION

MSE FILL WALL

HORIZONTAL CURVE DATA

CURVE KC28
P.I. STA. 1255+88.02
Δ = 19°-23'-20"
D = 1°-00'-13"
R = 5709.58'
T = 975.39'
L = 1932.12'

NOTES:
1. * ELEVATION OF TOP OF WALL AT BACK FACE, TYP.
2. ** ELEVATION AT TOP OF LEVELING PAD, TYP.
3. SEE DRAWING NO. 31-01 FOR MSE WALL NOTES.

12.5.11

GEORGIA REGISTERED NO. 24732 PROFESSIONAL ENGINEER ALBERT W. BOWMAN

WALL NO. 6

THE LPA GROUP A UNIT OF MICHAEL BAKER CORPORATION

THE LPA GROUP INCORPORATED
TRANSPORTATION CONSULTANTS
3596 ENGINEERING DRIVE
NORCROSS, GEORGIA 30092
(770) 263-9118

GEORGIA
DEPARTMENT OF TRANSPORTATION
ENGINEERING DIVISION-OFFICE OF BRIDGES AND STRUCTURES

WALL PLAN AND ELEVATION - MSE

I-20 CD LANES

DEKALB COUNTY 0009542

SCALE: 1" = 10'-0" DECEMBER 2011

DRAWING NO. 31-20

WALL SHEET 1 OF 2

DATE	REVISIONS	BY

DESIGNED BSB | CHECKED ANZ | REVIEWED WEI/WMD
DRAWN BSB | DESIGN GROUP AWB | APPROVED BFR

12/20/2011 4:24:10 PM R:\123300\Walls\final\W6-01.dgn