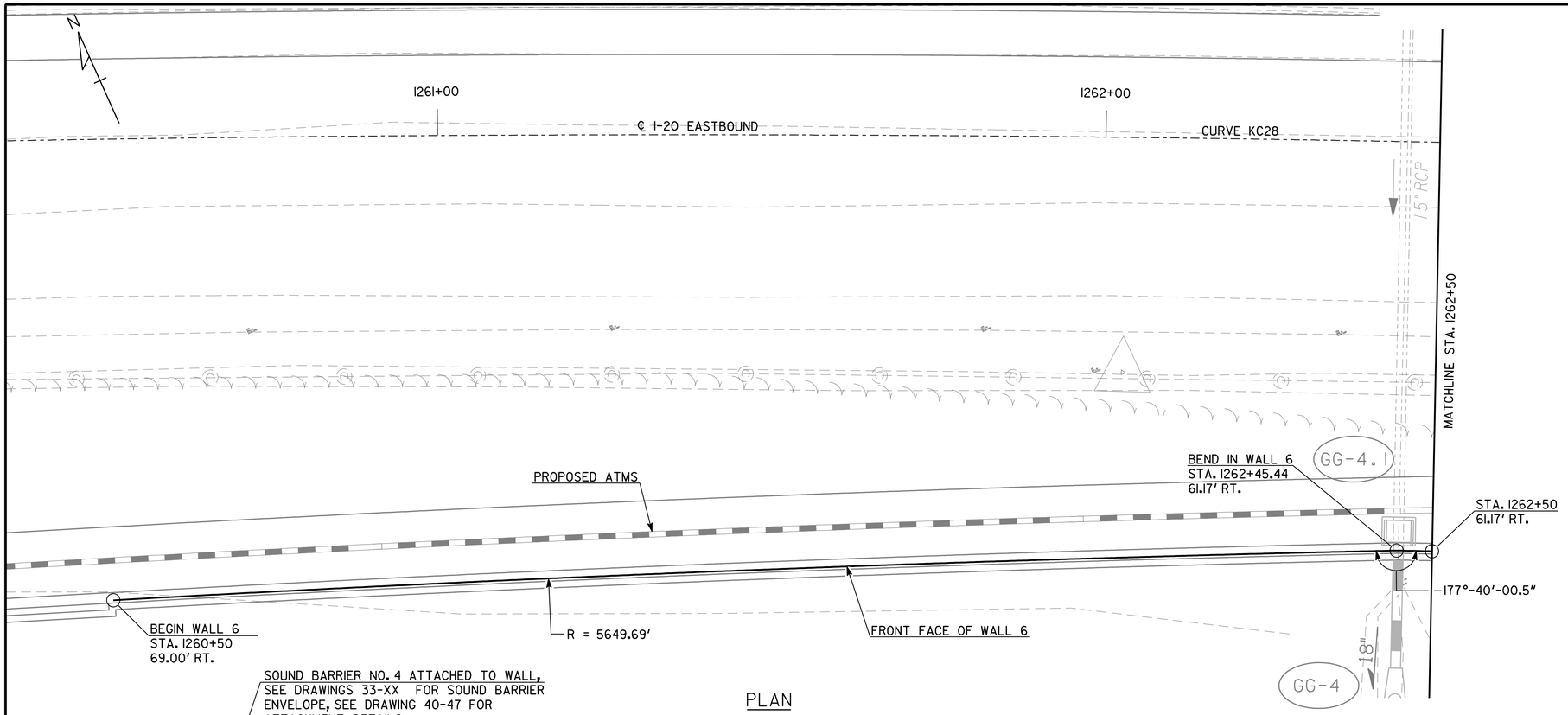

PLAN

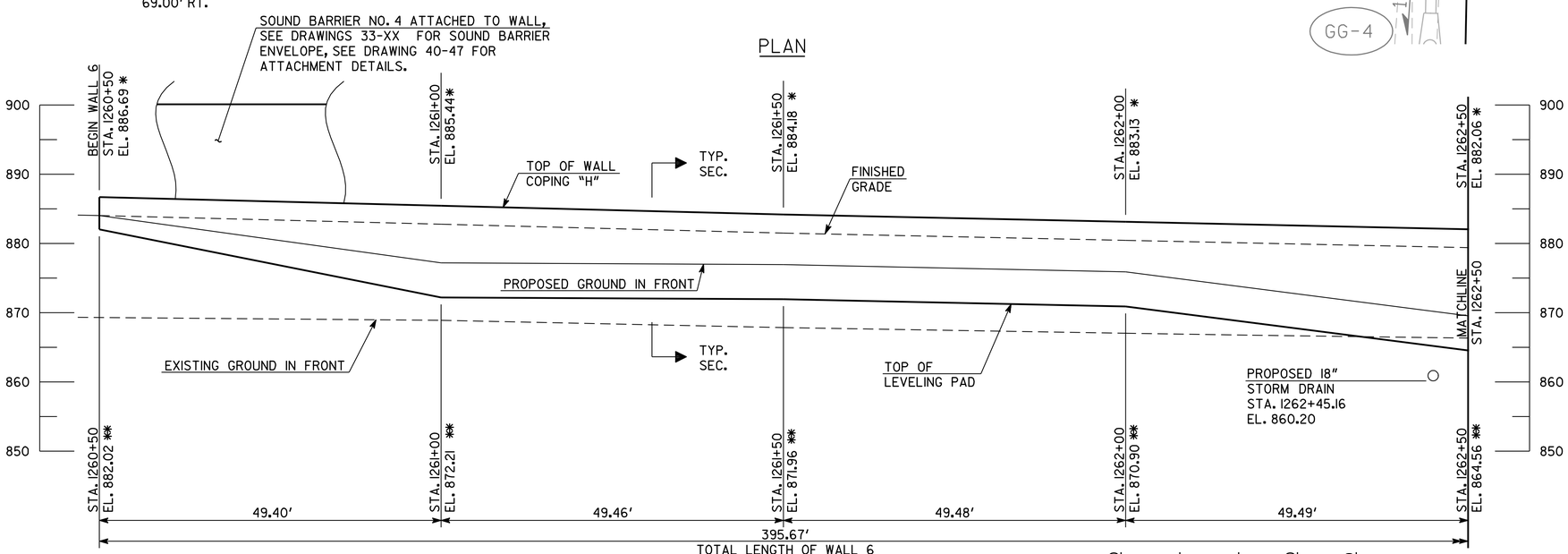

ELEVATION

LOOKING AT FRONT FACE OF WALL

PVI STA. 1260+50	PVI STA. 1261+00	PVI STA. 1261+50	PVI STA. 1262+00	PVI STA. 1262+50
EL. 886.19	EL. 884.94	EL. 883.68	EL. 882.45	EL. 881.25
-2.500%	-2.520%	-2.470%	-2.410%	

PROFILE GRADE DATA

I-20 EASTBOUND CD

WALL NO. 6 DESIGN DATA

DESIGN BEARING PRESSURE	3000 PSF
COHESION	0 PSF
ANGLE OF INTERNAL FRICTION	28°
UNIT WEIGHT	120 PCF
COEFFICIENT OF SLIDING FRICTION	0.35

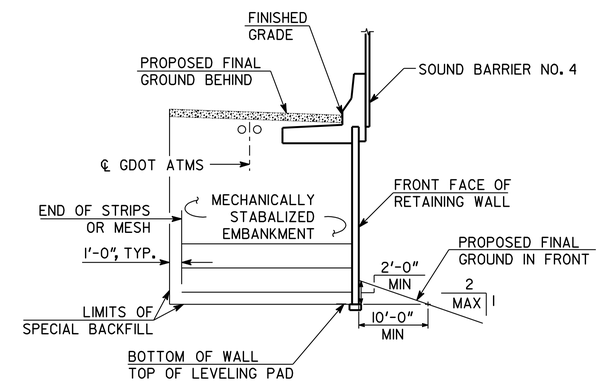

TYPICAL SECTION

MSE FILL WALL

THIS PLAN SET IS SEALED ONLY FOR THE AS-BUILT CONDITIONS DOCUMENTED THROUGH THE R.F.I. AND RED LINE PROCESS BY THE CONTRACTOR. THIS DOCUMENT WAS ORIGINALLY SEALED BY ALBERT W. BOWMAN, LICENSE NO. 24732 ON DECEMBER 5, 2011.

THIS MEDIA SHALL NOT BE CONSIDERED A CERTIFIED DOCUMENT AS TO THE ORIGINAL DOCUMENT BUT CERTIFIED ONLY AS TO THE REVISIONS.

HORIZONTAL CURVE DATA

CURVE KC28
P.I. STA. 1255+88.02
Δ = 19°-23'-20"
D = 1°-00'-13"
R = 5709.58'
T = 975.39'
L = 1932.12'

NOTES:
1. * ELEVATION OF TOP OF WALL AT BACK FACE, TYP.
2. ** ELEVATION AT TOP OF LEVELING PAD, TYP.
3. SEE DRAWING NO. 31-01 FOR MSE WALL NOTES.

12/5/11
GEORGIA REGISTERED PROFESSIONAL ENGINEER NO. 24732 ALBERT W. BOWMAN

WALL NO. 6

THE LPA GROUP
A UNIT OF MICHAEL BAKER CORPORATION

THE LPA GROUP INCORPORATED
TRANSPORTATION CONSULTANTS
3595 ENGINEERING DRIVE
NORCROSS, GEORGIA 30092
(770) 263-9118

GEORGIA
DEPARTMENT OF TRANSPORTATION
ENGINEERING DIVISION-OFFICE OF BRIDGES AND STRUCTURES

WALL PLAN AND ELEVATION - MSE
I-20 CD LANES

DEKALB COUNTY 0009542

SCALE: 1" = 10'-0" DECEMBER 2011

DRAWING NO. 31-20
WALL SHEET 1 OF 2

BY	REVISIONS	DATE

DESIGNED BSB | CHECKED ANZ | REVIEWED WEI/WMD
DRAWN BSB | DESIGN GROUP AWB | APPROVED BFR