AS-BUILT PLANS: 08/30/13

STATE	PROJECT NUMBER	SHEET NO.	TOTAL SHEETS
GA.	0009542	447	759

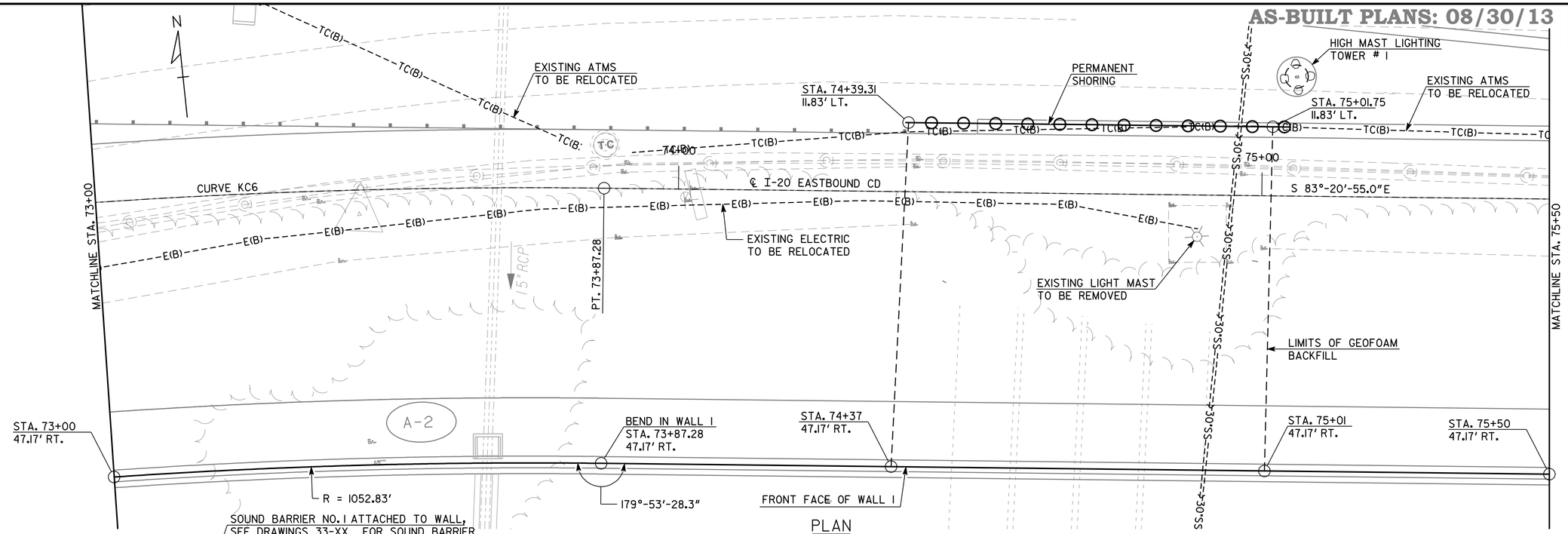

PLAN

SOUND BARRIER NO. 1 ATTACHED TO WALL, SEE DRAWINGS 33-XX FOR SOUND BARRIER ENVELOPE, SEE DRAWING 40-47 FOR ATTACHMENT DETAILS.

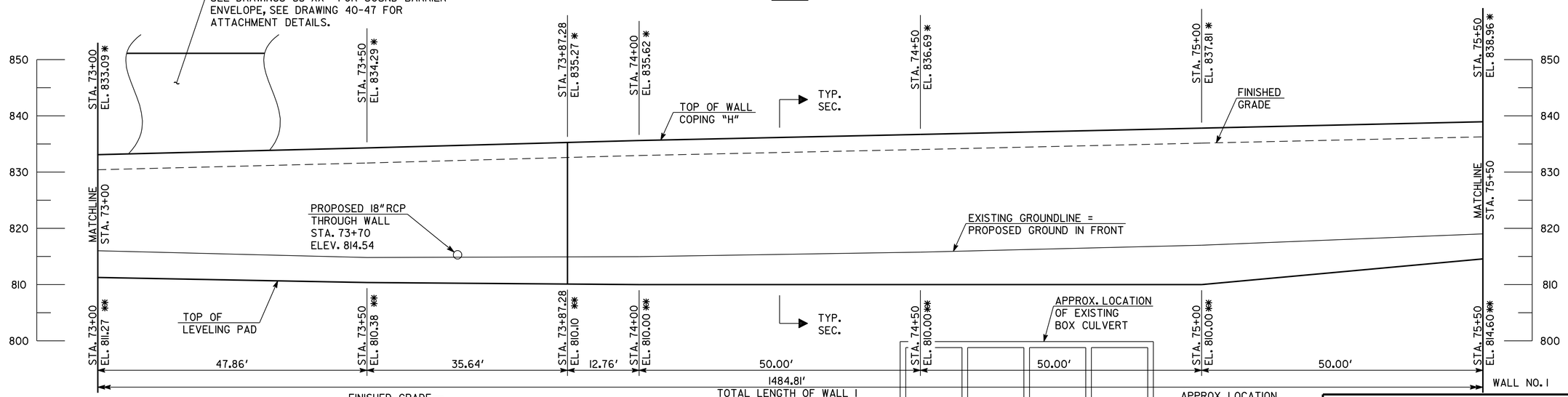

ELEVATION

LOOKING AT FRONT FACE OF WALL

HORIZONTAL CURVE DATA

CURVE KC6
P.I. STA. 70+63.23
Δ = 34°-52'-18"
D = 5°-12'-31"
R = 1100.00'
T = 345.48'
L = 669.49'

NOTES:
1. * ELEVATION OF TOP OF WALL AT BACK FACE, TYP.
2. ** ELEVATION AT TOP OF LEVELING PAD, TYP.

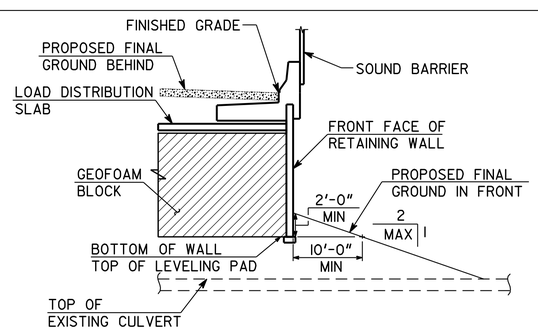

SECTION AT CULVERT

SEE DRAWING 05-11 FOR DETAILS

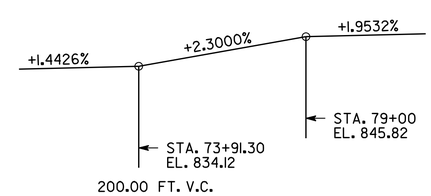

VERTICAL CURVE DATA
I-20 EASTBOUND CD

THE LPA GROUP
A UNIT OF MICHAEL BAKER CORPORATION

THE LPA GROUP INCORPORATED
TRANSPORTATION CONSULTANTS
3595 ENGINEERING DRIVE
NORCROSS, GEORGIA 30092
(770) 263-9118

GEORGIA
DEPARTMENT OF TRANSPORTATION
ENGINEERING DIVISION-OFFICE OF BRIDGES AND STRUCTURES

WALL PLAN AND ELEVATION - MSE
I-20 CD LANES
DEKALB COUNTY 0009542

SCALE: 1" = 10'-0" DECEMBER 2011

DRAWING NO. 31-02
WALL SHEET 2 OF 6

REVISIONS | DATE | BY

DESIGNED BSB | CHECKED ANZ | REVIEWED WEI/WMD
DRAWN BSB | DESIGN GROUP AWB | APPROVED BFR

10/1/2013 7:16:15 AM Y:\Roadways\123300\Walls\final\W1-02.dgn