AS-BUILT PLANS - 08/30/13

STATE	COUNTY	PROJECT NUMBER	SHEET NO.	TOTAL SHEETS
GA.				

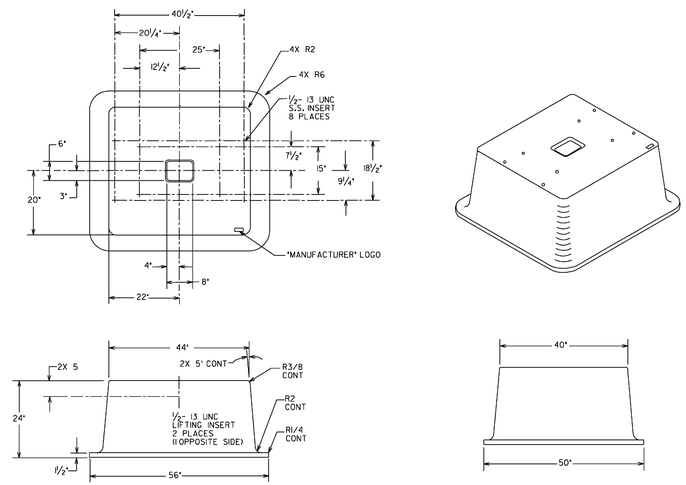

PREFABRICATED 332 CONTROLLER BASE

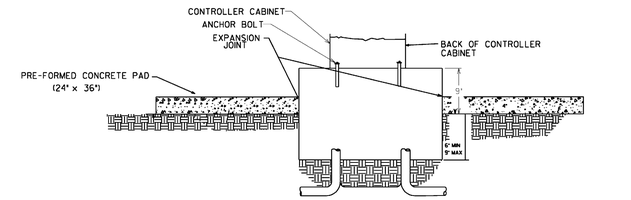

SECTION A-A

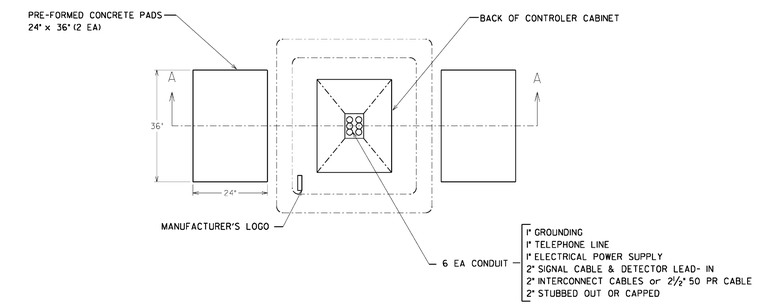

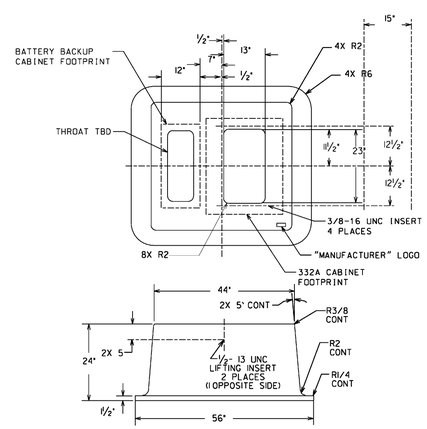

PREFABRICATED CONTROLLER BASE
WITH BATTERY BACKUP BASE MOUNT EXTENSION

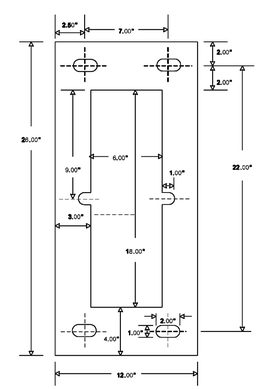

BATTERY BACKUP BASE MOUNT
CABINET ANCHOR BOLT PATTERN

NOTE: MODEL 332 CONTROLLER CABINETS
WITH BATTERY BACKUPS REQUIRES THREE PADS

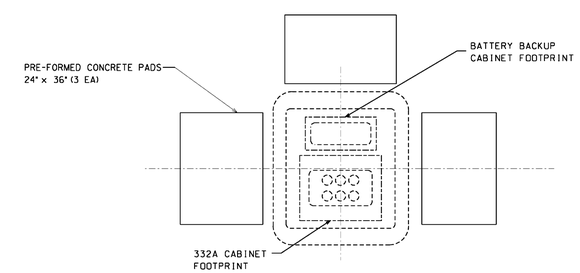

Guidelines For Usage On Metric Projects

When these details are incorporated into plans and or projects that are being prepared or constructed in metric units, exact or precise conversion to metric units is not required. The dimensions shown that are in feet and inches may be converted to corresponding metric units using the following "Rounded-Off" conversion factors: 1" =25mm, 4"=100mm, and 12" or 1' =300mm. All measurement notes that refer to linear feet and square yards shall be interpreted to mean linear meters and square meters.

DATE	REVISION DESCRIPTION	REV. BY:

DEPARTMENT OF TRANSPORTATION
STATE OF GEORGIA

TRAFFIC SIGNAL DETAIL

CABINET BASE DETAIL

DETAIL NUMBER

APRIL 2010
NOT TO SCALE · REPORT ERRORS

PROPERTY AND EXISTING R/W LINE
REQUIRED R/W LINE
CONSTRUCTION LIMITS
EASEMENT FOR CONSTR & MAINTENANCE OF SLOPES
EASEMENT FOR CONSTR OF SLOPES
EASEMENT FOR CONSTR OF DRIVES

BEGIN LIMIT OF ACCESS.....BLA
END LIMIT OF ACCESS.....ELA
LIMIT OF ACCESS
R/W AND LIMIT OF ACCESS
HISTORICAL BOUNDARY

A&R Engineering, Inc.
2160 Kingston Court, Suite O
Marietta, GA 30067
Tel: (770) 690-9255 Fax: (770) 690-9210
www.arengineering.com

SCALE IN FEET
0 50 100 200

REVISION DATES

STATE OF GEORGIA
DEPARTMENT OF TRANSPORTATION
OFFICE: INNOVATIVE PROGRAM DELIVERY

ATMS DETAILS

I-20 EASTBOUND CD LANES
I-285 TO PANOLA ROAD

DRAWING No. 28-031