RELEASED FOR CONSTRUCTION - 12/05/11

COUNTY	PROJECT NUMBER	SHEET NO.	TOTAL SHEETS

CONDUIT INSTALLATION DETAIL

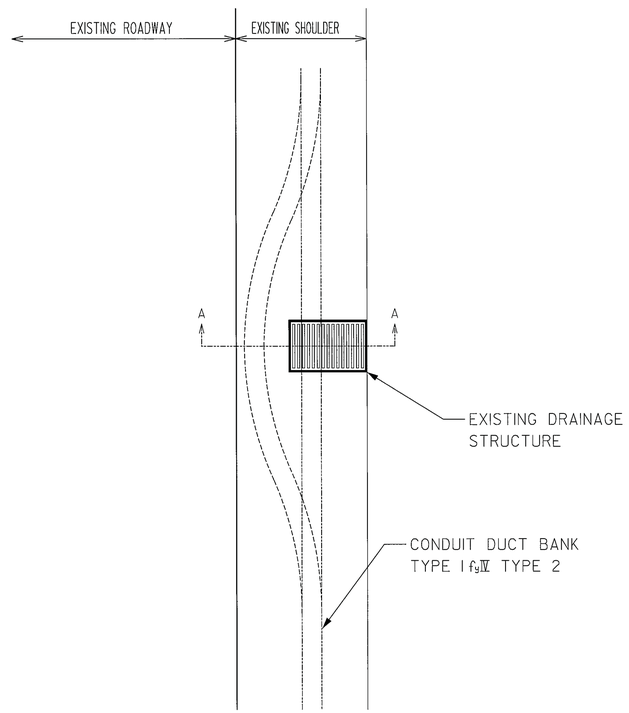

PLAN VIEW

- NOT TO SCALE -

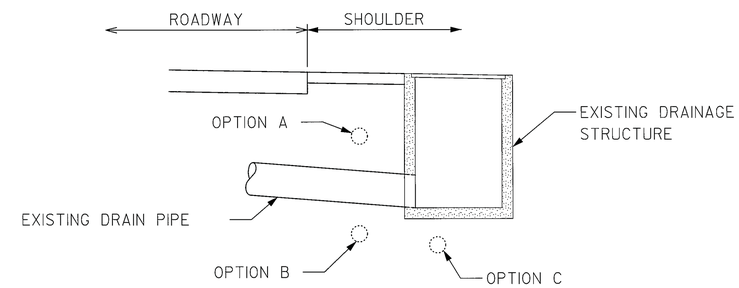

SECTION A-A

- NOT TO SCALE -

CONDUIT DUCT BANK INSTALLATION AT SHOULDER DRAINAGE STRUCTURE LOCATIONS

1. AT DRAINAGE STRUCTURE LOCATIONS WITHIN THE EXISTING SHOULDER, THE CONTRACTOR SHALL HAVE 3 OPTIONS FOR DUCT BANK INSTALLATION.

2. THE TOTAL COST FOR THE OPTION CHOSEN BY THE CONTRACTOR SHALL BE INCLUDED IN THE PRICE BID FOR CONDUIT DUCT BANK TYPE 1 OR TYPE 2.

3. OPTION A: TRENCH OR BORE OVER EXISTING DRAIN PIPE. CONTRACTOR MUST MAINTAIN A MINIMUM OF 18"DEPTH AND MINIMUM OF 6"CLEARANCE FROM EXISTING PIPE.
OPTION B: BORE UNDER EXISTING DRAIN PIPE, CONTRACTOR MUST MAINTAIN A MINIMUM 6"CLEARANCE UNDER DRAIN PIPE.
OPTION C: BORE UNDER EXISTING DRAINAGE STRUCTURE, CONTRACTOR MUST MAINTAIN A MINIMUM 12"CLEARANCE FROM THE BOTTOM OF THE STRUCTURE.

GEORGIA
DEPARTMENT OF TRANSPORTATION

- NO SCALE -

REVISION DATES		
09/01/2005		

STATE OF GEORGIA
DEPARTMENT OF TRANSPORTATION
OFFICE: TRAFFIC SAFETY & DESIGN
ATMS PLANS
CONDUIT INSTALLATION AT DRAINAGE STRUCTURES
DRAWING No. ITS-09

...\Its-09_drainage_dcct_bank.dgn 4/17/2007 7:49:41 AM

PROPERTY AND EXISTING R/W LINE
REQUIRED R/W LINE
CONSTRUCTION LIMITS
EASEMENT FOR CONSTR & MAINTENANCE OF SLOPES
EASEMENT FOR CONSTR OF SLOPES
EASEMENT FOR CONSTR OF DRIVES

BEGIN LIMIT OF ACCESS.....BLA
END LIMIT OF ACCESS.....ELA
LIMIT OF ACCESS
R/W AND LIMIT OF ACCESS
HISTORICAL BOUNDARY

A&R Engineering, Inc.
2160 Kingston Court, Suite O
Marietta, GA 30067
Tel: (770) 690-9255 Fax: (770) 690-9210
www.arengineering.com

SCALE IN FEET
0 50 100 200

REVISION DATES		

STATE OF GEORGIA
DEPARTMENT OF TRANSPORTATION
OFFICE: INNOVATIVE PROGRAM DELIVERY
ATMS DETAILS
I-20 EASTBOUND CD LANES
I-285 TO PANOLA ROAD
DRAWING No. 28-027