AS-BUILT PLANS - 08/30/13

FILL SECTION

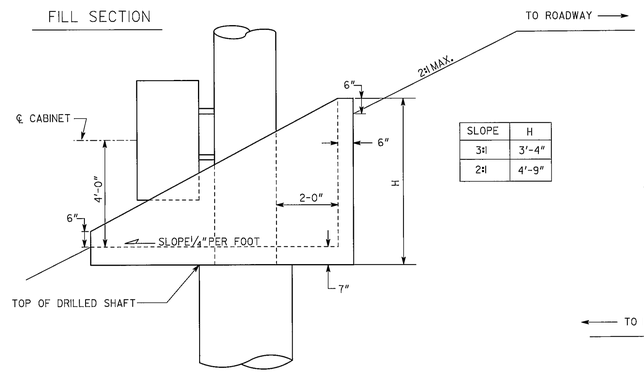

SLOPE	H
3:1	3'-4"
2:1	4'-9"

CUT SECTION

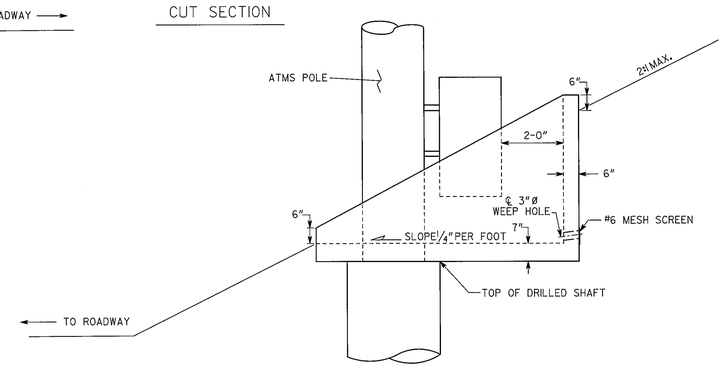

DESIGN DATA

SPECIFICATIONS ---------- AASHTO 2002

CONCRETE ---------- CLASS A, f'_c = 3,000 PSI

REINFORCEMENT STEEL ---------- GRADE 60, f_y = 60,000 PSI

DESIGN SOIL PRESSURE ---------- 3 KSF

COHESION ---------- 0

ANGLE OF INTERNAL FRICTION ---------- 28°

UNIT WEIGHT ---------- 110 PCF

COEFFICIENT OF SLIDING FRICTION ---------- 0.45

* -FIELD CUT TO CLEAR ATMS POLE

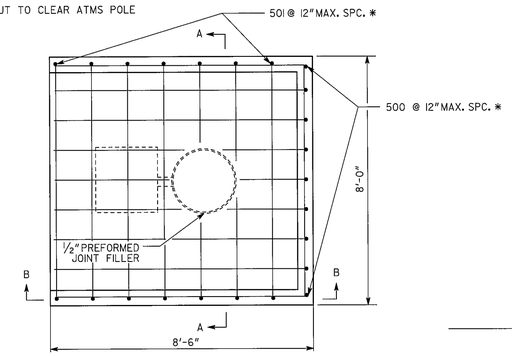

PLAN

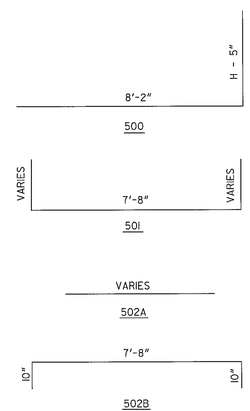

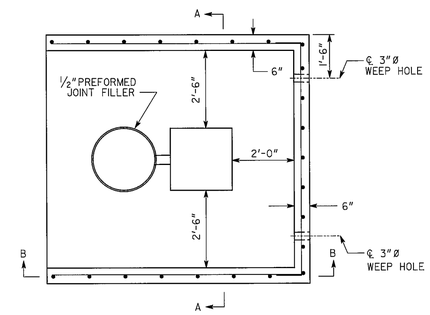

PLAN

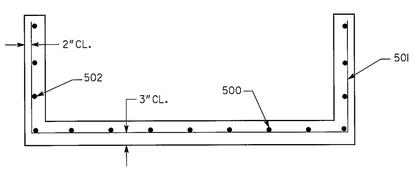

SECTION A-A

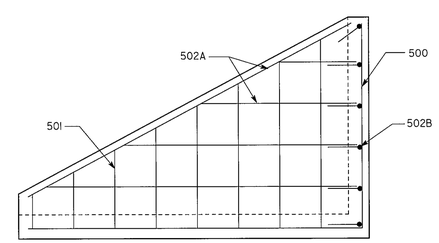

SECTION B-B

GENERAL NOTES

SPECIFICATIONS - GEORGIA STANDARD SPECIFICATIONS, 2001 EDITION, AS MODIFIED BY CONTRACT DOCUMENTS.

REINFORCING STEEL - ALL REINFORCING STEEL SHALL BE PLACED AND TIED IN ACCORDANCE WITH THE GEORGIA DOT SPECIFICATIONS. WELDING OF REINFORCING STEEL WILL NOT BE PERMITTED.

FINISH - EXPOSED SURFACES OF THE WALL SHALL RECEIVE A TYPE III FINISH.

CONCRETE COVER - MAINTAIN 3" COVER ON ALL FOOTING REINFORCING AND 2" COVER ON ALL STEM REINFORCING.

INCIDENTAL ITEMS - COST INCIDENTAL TO THE WORK THAT IS NOT SPECIFICALLY COVERED BY THE GEORGIA STANDARD SPECIFICATIONS, SUPPLEMENTAL SPECIFICATIONS AND/OR SPECIAL PROVISIONS SHALL BE INCLUDED IN THE OVERALL BID SUBMITTED. THIS INCLUDES THE COST OF JOINT FILLERS, AND OTHER INCIDENTAL ITEMS NECESSARY TO COMPLETE THE WORK.

SUMMARY OF QUANTITIES

PAY ITEM NUMBER	QUANTITY	UNIT	PAY ITEM
500-3701	3	CY	CLASS A CONCRETE, RETAINING WALL
511-1000	320	LB	BAR REINFORCING STEEL

NOTE: QUANTITIES SHOWN ASSUME A 2:1 SLOPE

GEORGIA
DEPARTMENT OF TRANSPORTATION

- NO SCALE -

REVISION DATES		
06/01/2005		

STATE OF GEORGIA
DEPARTMENT OF TRANSPORTATION
OFFICE: BRIDGE DESIGN
ATMS PLANS
PLATFORM DETAILS
ITS-05

DESIGNED DDF DRAWN DDF | CHECKED SWW DESIGN GROUP SWW | REVIEWED HSL APPROVED PLV | DRAWING No.

PROPERTY AND EXISTING R/W LINE
REQUIRED R/W LINE
CONSTRUCTION LIMITS
EASEMENT FOR CONSTR & MAINTENANCE OF SLOPES
EASEMENT FOR CONSTR OF SLOPES
EASEMENT FOR CONSTR OF DRIVES

BEGIN LIMIT OF ACCESS.....BLA
END LIMIT OF ACCESS.....ELA
LIMIT OF ACCESS
R/W AND LIMIT OF ACCESS
HISTORICAL BOUNDARY

A&R Engineering, Inc.
2160 Kingston Court, Suite O
Marietta, GA 30067
Tel: (770) 690-9255 Fax: (770) 690-9210
www.a-reng.com

SCALE IN FEET
0 50 100 200

REVISION DATES		

STATE OF GEORGIA
DEPARTMENT OF TRANSPORTATION
OFFICE: INNOVATIVE PROGRAM DELIVERY
ATMS DETAILS
I-20 EASTBOUND CD LANES
I-285 TO PANOLA ROAD

DRAWING No. 28-024