AS-BUILT PLANS - 08/30/13

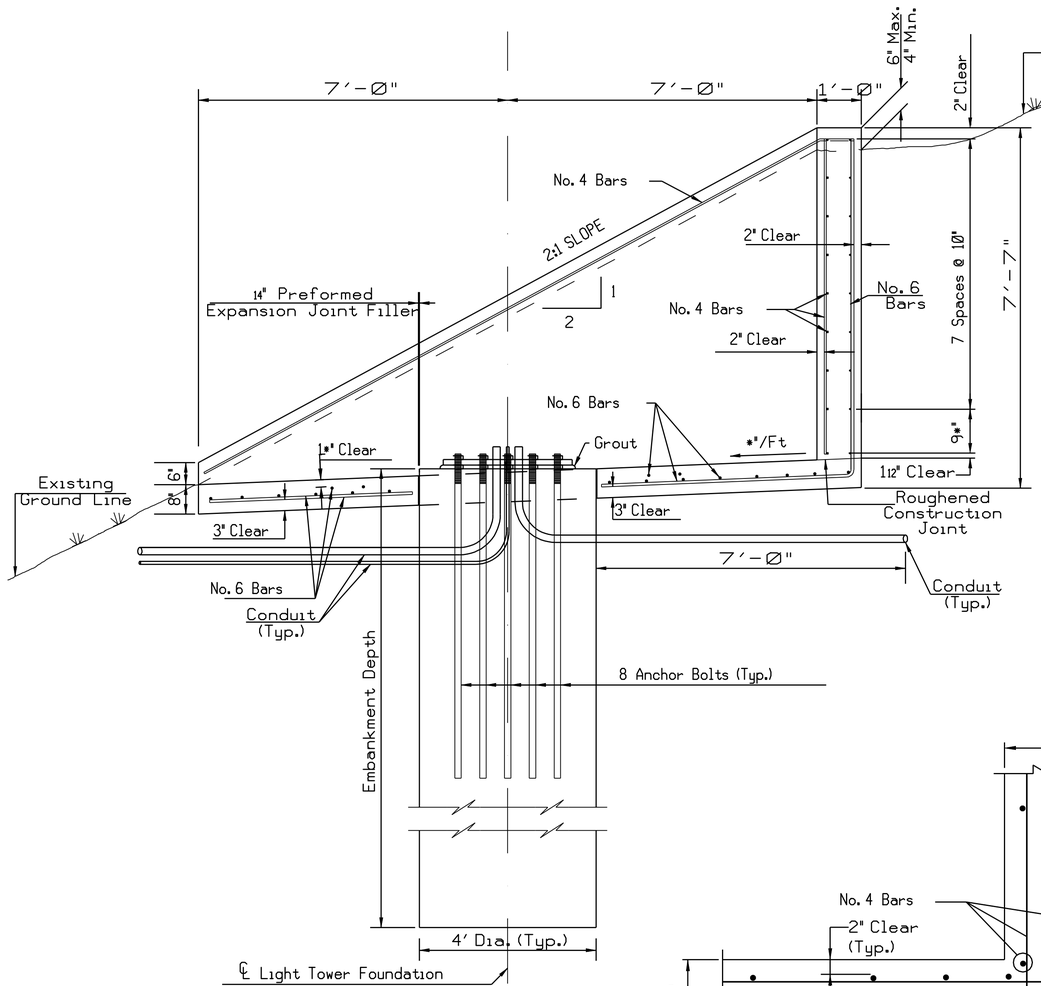

SECTION A-A

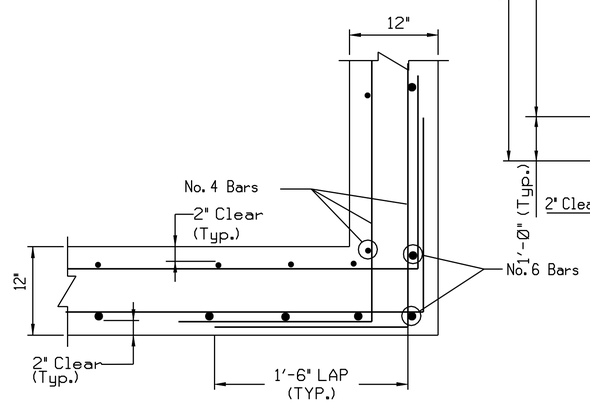

REINFORCEMENT DETAIL AT WALL CORNERS

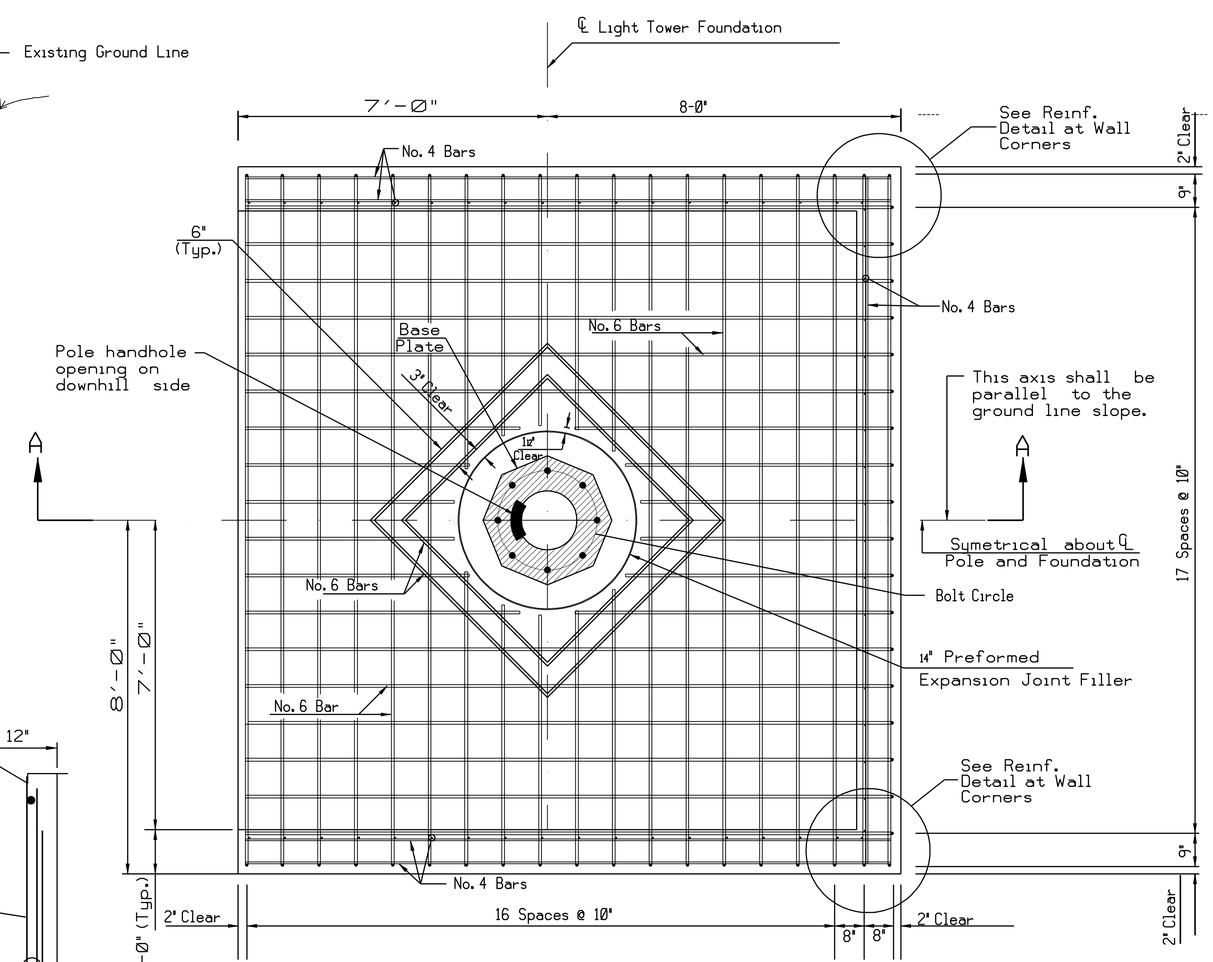

PLAN

MAINTENANCE PLATFORM QUANTITIES			
	Total per Platform	Number of Platforms	Total
Cu. Yds. Class 'A' Concrete	13.6	1	13.6
Lbs. Bar Reinforcing Steel	2032	1	2032

NOTE:

EXCAVATION FOR MAINTENANCE PLATFORMS WILL NOT BE PAID FOR SEPARATELY AND SHALL BE INCLUDED IN THE COST OF CONTRACT ITEMS.

MAINTENANCE PLATFORM TO BE USED FOR 2:1 SLOPES ONLY.

MAINTENANCE PLATFORM FOR TOWER 2 (DWG. 25-03).

© 2011
ATLANTA CONSULTING ENGINEERS, INC.
ALL RIGHTS RESERVED

THESE CONSTRUCTION DOCUMENTS AND PERMITTED REPRODUCTIONS, IN WHOLE OR IN PART, ARE INSTRUMENTS OF SERVICE AND ARE THE SOLE PROPERTY OF ATLANTA CONSULTING ENGINEERS, INC. UNLESS OTHERWISE AGREED TO, THEY SHALL NOT BE REPRODUCED OR CONVEYED IN ANY MANNER NOR ARE THEY TO BE USED FOR ANY OTHER PROJECTS OTHER THAN THAT SPECIFICALLY INDICATED HEREIN WITHOUT WRITTEN PERMISSION FROM AND FULL COMPENSATION TO ATLANTA CONSULTING ENGINEERS, INC.

ATLANTA CONSULTING ENGINEERS
500 SUN VALLEY DRIVE
UNIT G2
ROSWELL, GEORGIA 30076
bal@atlconsengrs.com
Tel: 678-205-2240
Fax: 678-205-2239

THE LPA GROUP
TRANSPORTATION CONSULTANTS
A UNIT OF MICHAEL BAKER CORPORATION
3595 ENGINEERING DRIVE
NORCROSS, GEORGIA 30092
(770) 263-9118

REVISION DATES		
01-20-2012		

STATE OF GEORGIA
DEPARTMENT OF TRANSPORTATION
OFFICE: INNOVATIVE PROGRAM DELIVERY

LIGHTING PLANS

LIGHTING DETAILS

DRAWING No. 25-008