STATION RANGE TYPICAL SECTION 5
I-20 MAINLINE EASTBOUND
STA. 1245+00.00 TO STA. 1294+80.00

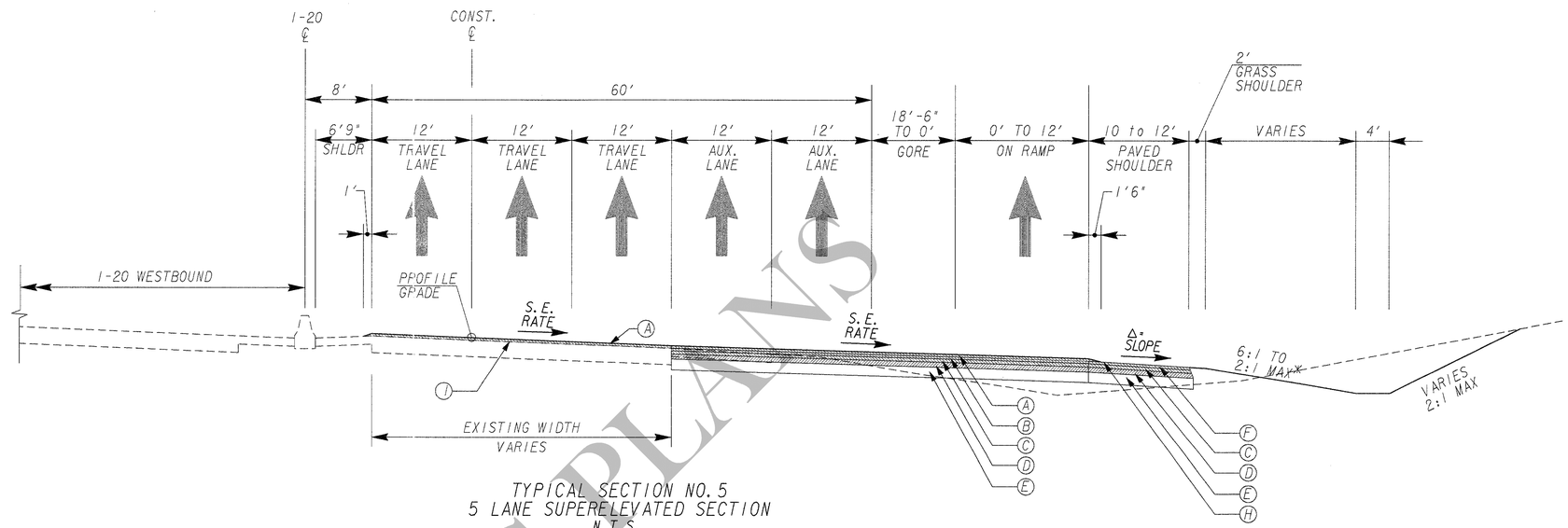

TYPICAL SECTION NO. 5
5 LANE SUPERELEVATED SECTION
N.T.S.

(A) 135 LB/SY ASPH CONC 12.5 MM PEM, GP 2 ONLY, INCL POLYMER-MODIFIED BITUM MATL & H LIME
(B) 220 LB/SY RECYCLED ASPH CONC 12.5MM, SMA, GP 2 ONLY, INCL POLYMER-MODIFIED BITUM MATL & H LIME
(C) 220 LB/SY ASPH CONC 19 MM SUPERPAVE, GP 1 OR 2, INCL MATL & H LIME
(D) 1540 LB/SY RECYCLED ASPH CONC 25MM SUPERPAVE, GP 1 OR 2, INCL BITUM MATL & H LIME
(E) 16" GRADED AGGR BASE
(F) 220 LB/SY RECYCLED ASPH CONC 12.5MM, SUPERPAVE, GP 2 ONLY, INCL BITUM MATL & H LIME
(G) INDENTATION RUMBLE STRIPS, 16" WIDE
(H) INDENTATION RUMBLE STRIPS, 3 FT WIDE
(I) RECYCLED ASPHALT CONC LEVELING, INCL BITUM MATL & H LIME, AS DIRECTED BY ENGINEER
(J) MILL EXISTING ASPALT CONCRETE PAVEMENT TO CONCRETE BRIDGE DECK, UNKNOWN DEPTH
(K) ASPHALTIC JOINT SEAL, AS NEEDED
(L) RECYCLED ASPH CONC 12.5MM, SMA, GP 2 ONLY, INCL POLYMER-MODIFIED BITUM MATL & H LIME, UNKNOWN DEPTH

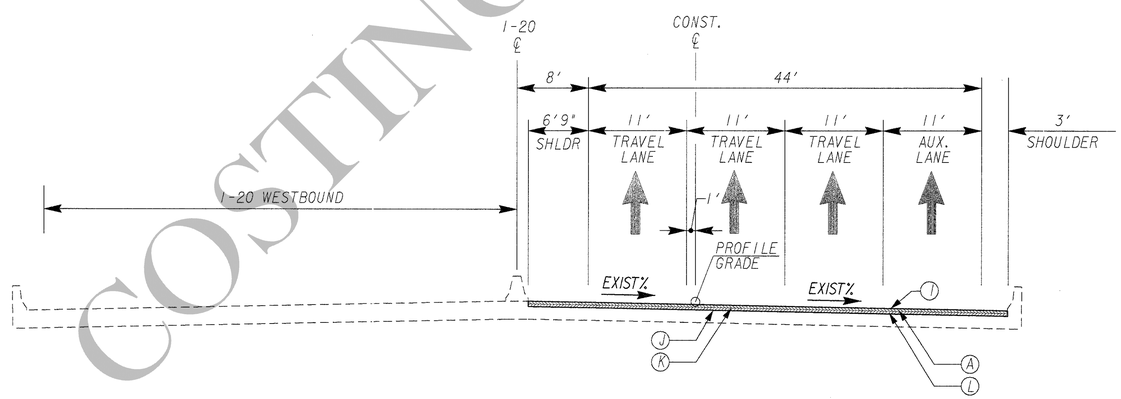

STATION RANGE TYPICAL SECTION 6
I-20 MAINLINE EASTBOUND
STA. 1302+34.80 TO STA. STA. 1304+26.89

TYPICAL SECTION NO. 6
SNAPFINGER CREEK BRIDGE
N.T.S.
SEE SPECIAL PROVISION 999.1.C

NOTE:
SEE ROADWAY PLANS FOR S.E. RATES AND TRANSITIONS.

FOR METHOD OF SUPERELEVATION SEE CONSTR PLAN & PROFILE SHEETS-CURVE DATA. LOCATIONS OF NORMAL CROWN & FULL S.E. NOTED ON CONSTR CENTERLINE.

REFER TO GEORGIA DOT CONSTRUCTION DETAIL S-4 FOR SHOULDER WIDENING DETAIL WHERE GUARDRAIL PRESENT

SEE ROADWAY PLANS FOR GUARDRAIL AND RETAINING WALL LOCATIONS.

COSTING PLANS

COSTING PLANS

ARCADIS
Infrastructure, environment, buildings

REVISION DATES

STATE OF GEORGIA
DEPARTMENT OF TRANSPORTATION
OFFICE:
TYPICAL SECTIONS
I-20 EASTBOUND CD LANES
I-285 TO PANOLA ROAD

DRAWING NO. 5-03