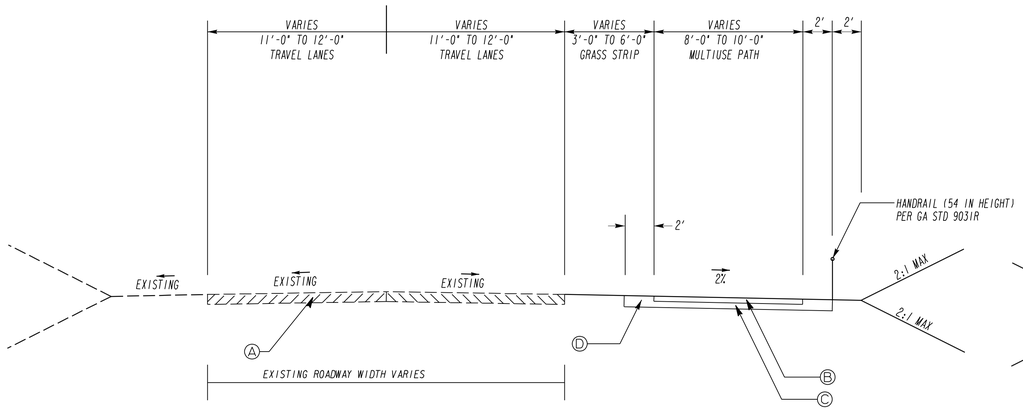

TS-8

REDWINE ROAD
TYPICAL SECTION WITH PATH
STA. 29+25 TO STA. 29+65

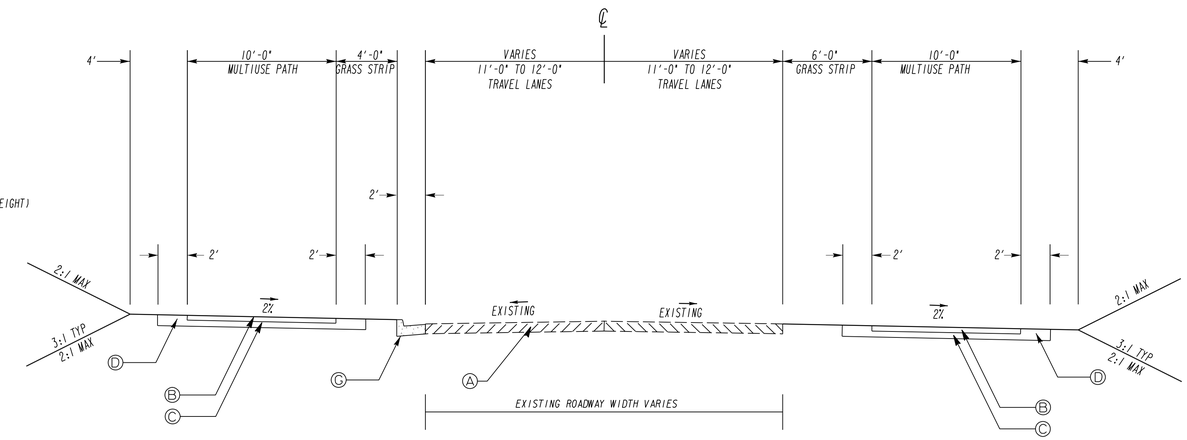

TS-9

REDWINE ROAD
TYPICAL SECTION WITH PATH
STA. 50+53 TO STA. 55+00

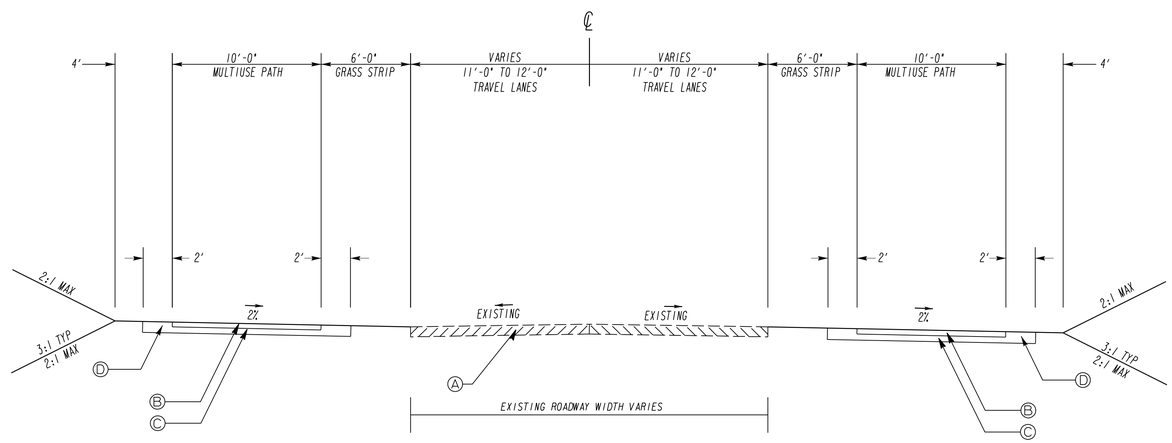

TS-10

REDWINE ROAD
TYPICAL SECTION WITH PATH
STA. 55+00 TO STA. 56+20
STA. 56+32 TO STA. 58+01

REQUIRED PAVEMENT

- (A) EXISTING PAVEMENT, TO BE RETAINED
- (B) RECYCLED ASPH CONC 9.5 MM SUPERPAVE, GP 1 OR 2, INCL BITUM MATL & H-LIME, 220 LB/SQ YD
- (C) GR AGGR BASE CRS, 4 IN
- (D) GR AGGR BASE CRS, 8 IN
- (E) TIMBER BOARDWALK
- (F) EXISTING CURB AND GUTTER, TO BE RETAINED
- (G) CONC CURB AND GUTTER, TP 2, 8 IN X 24 IN

Kimley-Horn and Associates, Inc.
Engineering, Planning, and Environmental Consultants
817 W. Peachtree Street NW, Suite 601
Atlanta, GA 30308

NOT TO SCALE

REVISION DATES		
06/10/2011		

STATE OF GEORGIA
DEPARTMENT OF TRANSPORTATION
OFFICE: TRAFFIC OPERATIONS

TYPICAL SECTIONS

DRAWING No. 5-03