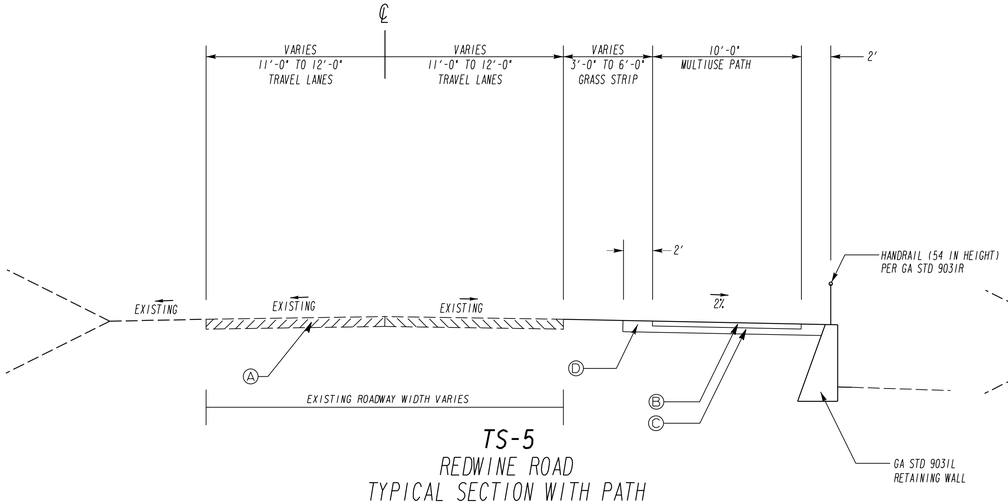

TS-5
REDWINE ROAD
TYPICAL SECTION WITH PATH
STA. 22+62 TO STA. 23+00
STA. 35+00 TO STA. 36+00
STA. 37+50 TO STA. 37+66

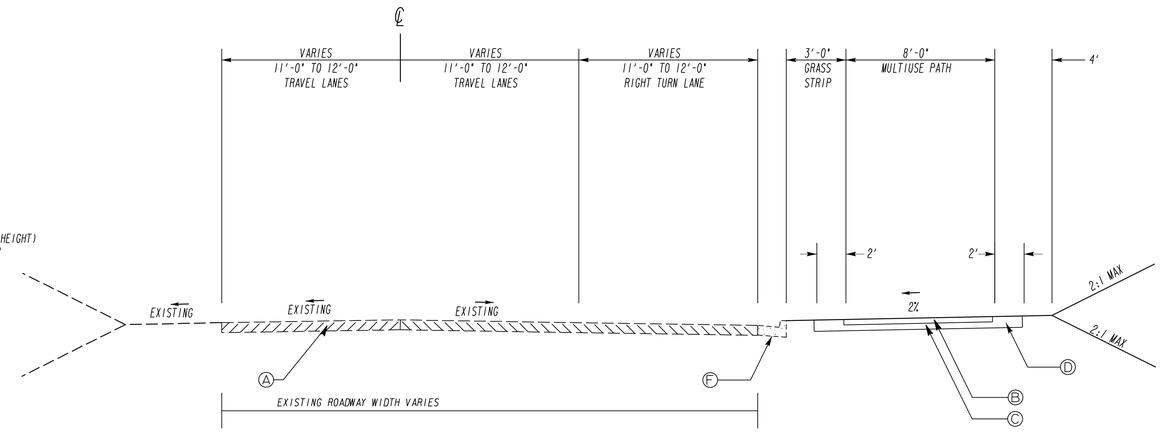

TS-6
REDWINE ROAD
TYPICAL SECTION WITH PATH
STA. 23+90 TO STA. 25+67
STA. 26+12 TO STA. 27+85
STA, 30+05 TO STA. 33+46
STA. 38+74 TO STA. 40+99

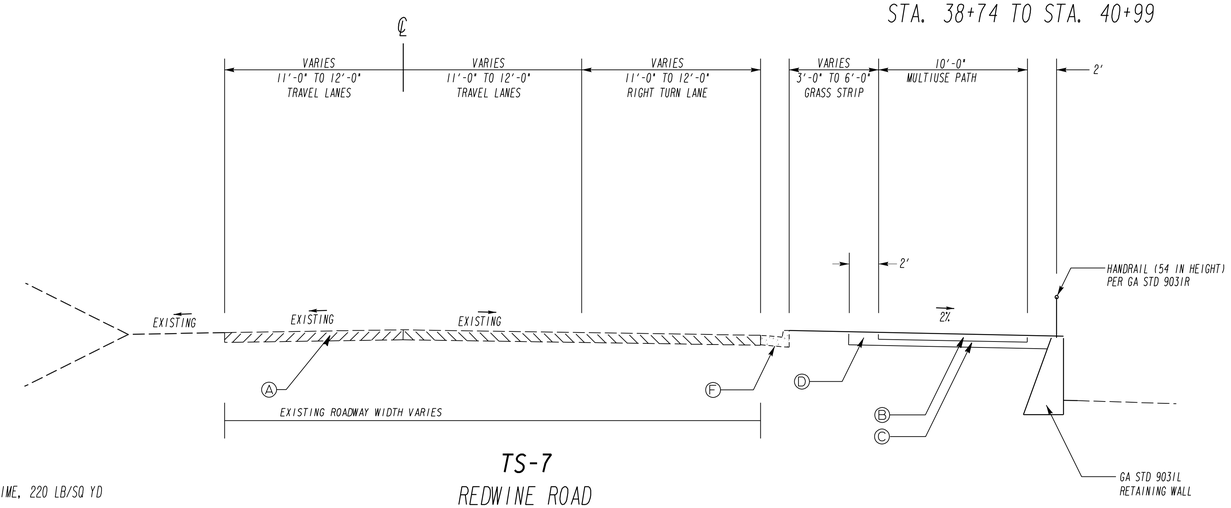

TS-7
REDWINE ROAD
TYPICAL SECTION WITH PATH
STA. 25+67 TO STA. 26+12
STA. 37+66 TO STA. 38+74

REQUIRED PAVEMENT

- (A) EXISTING PAVEMENT, TO BE RETAINED
- (B) RECYCLED ASPH CONC 9.5 MM SUPERPAVE, GP 1 OR 2, INCL BITUM MATL & H-LIME, 220 LB/SQ YD
- (C) GR AGGR BASE CRS, 4 IN
- (D) GR AGGR BASE CRS, 8 IN
- (E) TIMBER BOARDWALK
- (F) EXISTING CURB AND GUTTER, TO BE RETAINED
- (G) CONC CURB AND GUTTER, TP 2, 8 IN X 24 IN

Kimley-Horn and Associates, Inc.
Engineering, Planning, and Environmental Consultants
817 W. Peachtree Street NW, Suite 601
Atlanta, GA 30308

NOT TO SCALE

REVISION DATES

STATE OF GEORGIA
DEPARTMENT OF TRANSPORTATION
OFFICE: TRAFFIC OPERATIONS

TYPICAL SECTIONS

DRAWING No. 5-02