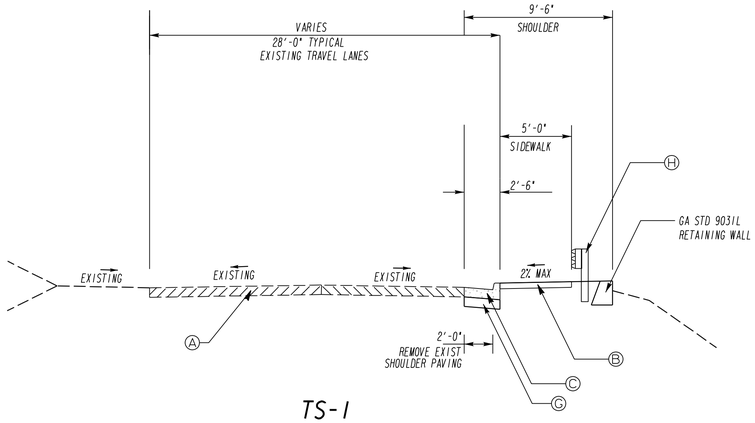

TS-1

SR 135/PETERSON STREET
STA. 10+62 TO STA. 11+30

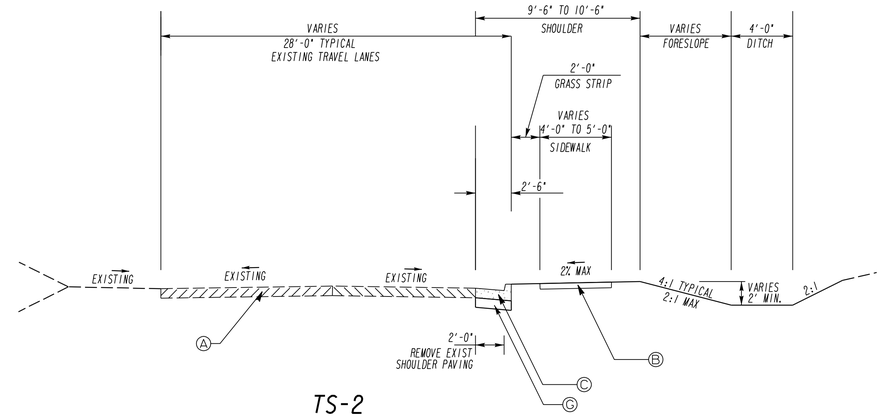

TS-2

SR 135/PETERSON STREET
STA. 11+30 TO STA. 17+98

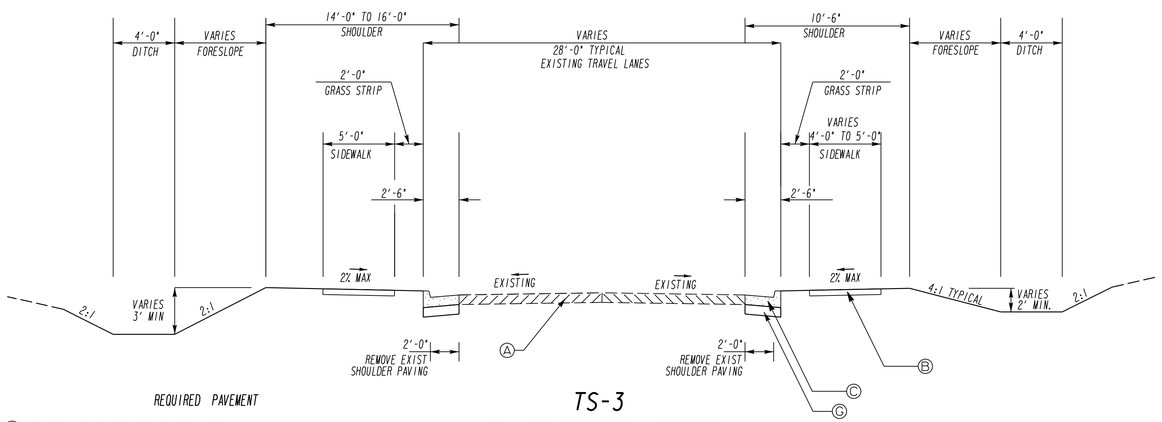

TS-3

SR 135/PETERSON STREET
STA. 17+98 TO STA. 29+87

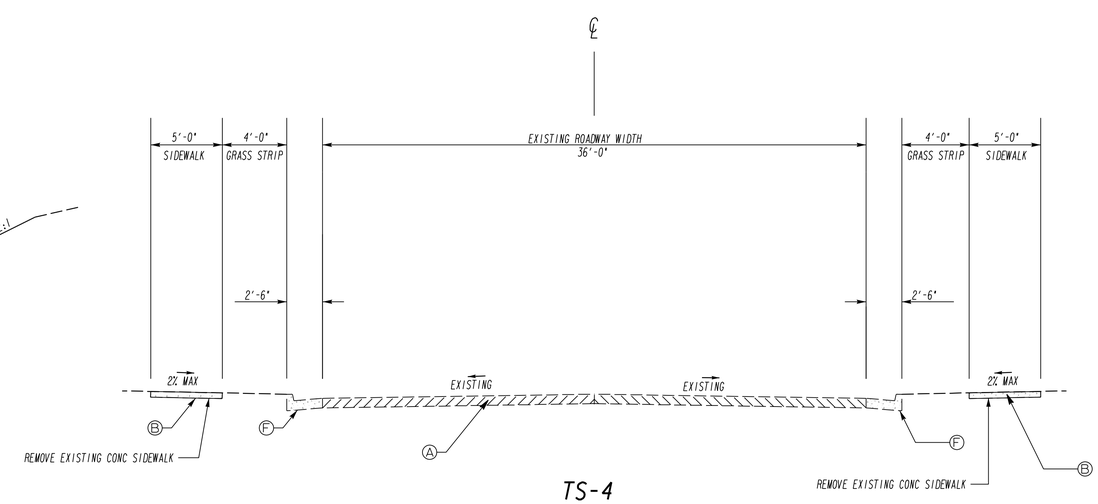

TS-4

SR 135/PETERSON STREET
STA. 29+87 TO STA. 34+00

REQUIRED PAVEMENT

- (A) EXISTING PAVEMENT, TO BE RETAINED
- (B) CONC SIDEWALK, 4 IN
- (C) CONC CURB & GUTTER, 8 IN X 30 IN, TP 2
- (D) EXISTING SIDEWALK, TO BE RETAINED
- (E) EXISTING PAVEMENT, TO BE REMOVED
- (F) EXISTING CURB TO BE RETAINED
- (G) CLASS B CONC, BASE OR PVMT WIDENING
- (H) GUARDRAIL, TP T
- (I) CONCRETE MEDIAN, 6 IN

Kimley-Horn and Associates, Inc.
Engineering, Planning, and Environmental Consultants
817 W. Peachtree Street NW, Suite 601
Atlanta, GA 30308

NOT TO SCALE

REVISION DATES

STATE OF GEORGIA
DEPARTMENT OF TRANSPORTATION
OFFICE: TRAFFIC OPERATIONS

TYPICAL SECTIONS

DRAWING No. 5-01