STATE	PROJECT NUMBER	SHEET NO.	TOTAL SHEETS
GA.	CSMSL-0009-00(159)	151	277

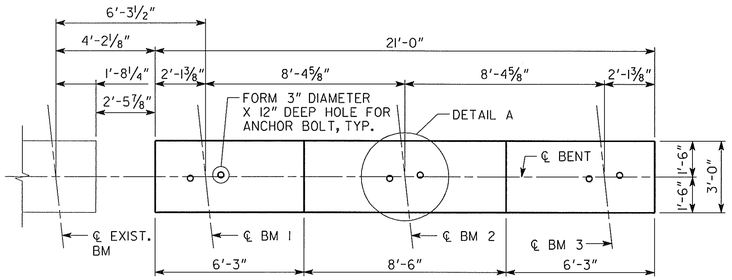

PLAN

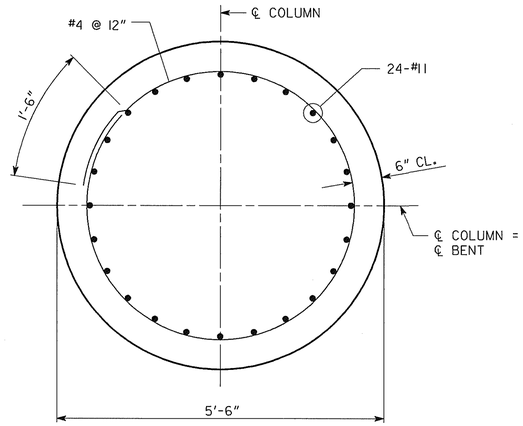

SECTION C-C

NOTE:

MAINTAIN 2" CL. ON ALL REINFORCEMENT UNLESS OTHERWISE NOTED.

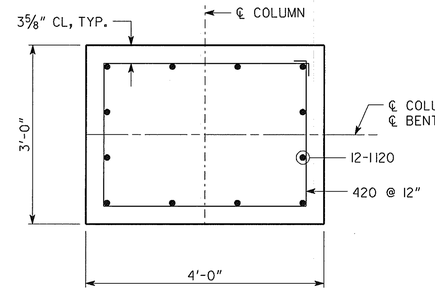

SECTION B-B

NOTES:

1. ALL CAP ELEMENTS ARE TO BE PRECAST.
2. USE CLASS AAA CONCRETE WITH A MINIMUM 28-DAY STRENGTH OF 4500 PSI FOR THE PRECAST CAPS. USE CLASS AA CONCRETE FOR THE COLUMNS. THE QUANTITY SHOWN FOR CLASS AA CONCRETE INCLUDES THE CLASS AA AND THE CLASS AAA CONCRETE.
3. HORIZONTAL TOLERANCE FOR #11 COLUMN BARS IS ± ⅛" AT TOP OF COLUMN.
4. USE NMB SPLICE SLEEVES, LENTON INTERLOCK BAR SPLICES OR APPROVED EQUAL.
5. COAT THE TOP OF THE COLUMN WITH APPROXIMATELY ½" OF EPOXY GROUT JUST PRIOR TO SETTING CAP. MAKE THE EPOXY GROUT USING A TYPE IV EPOXY ON THE GEORGIA DOT OFFICE OF MATERIALS AND RESEARCH QUALIFIED PRODUCTS LIST. ONCE THE CAP IS PLACED ON THE COLUMN AND BEFORE THE GROUT HAS SET, THE CONTRACTOR SHALL ENSURE THAT THE CAP FACES ARE PLUMB AND THAT THE CAP IS IN THE PROPER HORIZONTAL LOCATION ON THE COLUMN. CAPS SHALL BE ADEQUATELY BRACED UNTIL THE SPLICE SLEEVES ARE GROUTED AND THE GROUT IN THE SLEEVES AND IN THE JOINT DEVELOPS 3000 PSI STRENGTH FOR THE CAP TO BE SELF-SUPPORTING (MINIMUM 24 HOURS AFTER GROUTING SLEEVES).

VOID

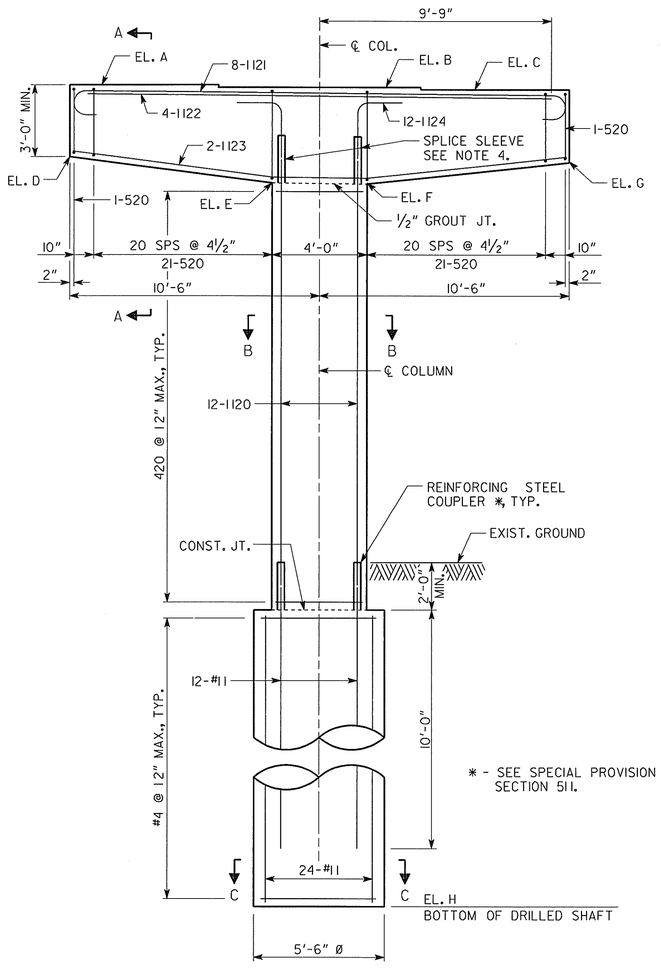

ELEVATION
LOOKING AHEAD

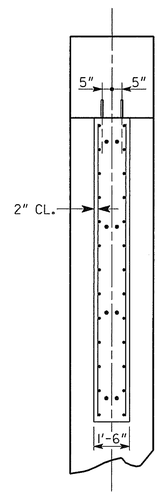

SECTION D-D

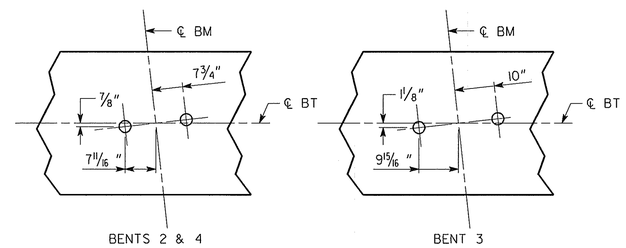

DETAIL "A"
ANCHOR BOLT LAYOUTS

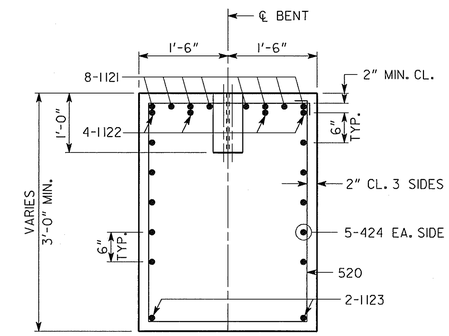

SECTION A-A

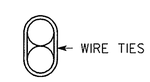

BARS TO BE BUNDLED SHALL BE BUNDLED VERTICALLY

BUNDLING DETAIL

SUBSTRUCTURE QUANTITIES			
ITEM	BENT 2	BENT 3	BENT 4
CLASS AA CONCRETE, CY	16.4	16.2	17.7
BAR REINF STEEL, LB	3867	3877	4079

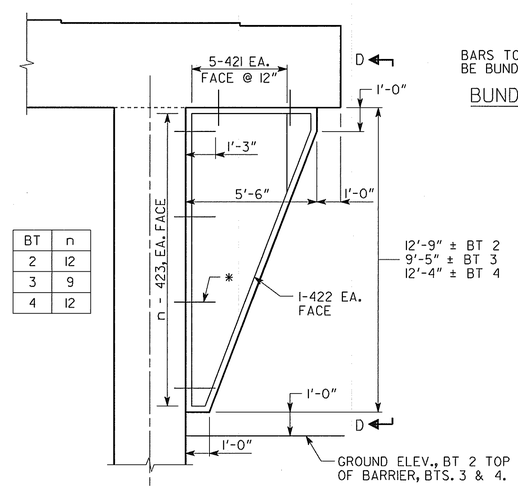

BT	n
2	12
3	9
4	12

EXISTING BENT RETROFIT
EAST END OF EXIST. BENT

* 2-#5 ANCHORED WITH TYPE VIII APPROVED EPOXY, 6" EMBEDMENT IN COLUMN AND CAP, 12 TOTAL.

ELEVATIONS			
ELEV.	BENT 2	BENT 3	BENT 4
A	959.68	961.36	962.95
B	959.57	961.26	962.84
C	959.47	961.15	962.74
D	956.64	958.34	959.91
E	955.45	957.12	958.72
F	955.45	957.12	958.72
G	956.39	958.06	959.66
H	883.0±	885.0±	888.0±

NOTE: DRILLED SHAFTS ARE DESIGNED FOR AN ALLOWABLE BEARING PRESSURE OF 80 KSF ON ROCK. SHAFTS SHALL HAVE A MINIMUM OF 7 FEET EMBEDMENT INTO SOUND ROCK.

BRIDGE NO. 1

ARCADIS
2849 PACES FERRY ROAD, SUITE 400
ATLANTA, GEORGIA 30339
TEL: 770/431-8666 FAX: 770/435-2666

GEORGIA
DEPARTMENT OF TRANSPORTATION
ENGINEERING DIVISION-OFFICE OF BRIDGES AND STRUCTURES

BENTS 2, 3 & 4
SR 9 (ROSWELL ROAD) OVER I-285
FULTON COUNTY △ CSMSL-0009-00(159)

REVISIONS		
BY	PROJ. & SHEET NOS.	DATE
JPT		02/14/11

DRAWING NO. 35-15
BRIDGE SHEET 15 OF 18

SCALE: NO SCALE — AUGUST 2010

DESIGNED JPT — CHECKED JMA — REVIEWED WMD/WEI
DRAWN MLF — DESIGN GROUP X — APPROVED PVL

1 INCH WHEN PRINTED FULL SIZE

X.DGN

User Name: $(USER) Date: 2/15/2011 Time: 10:09:56 PM Filename: G:\Tro\16393 - RoswellRd\Bridge\Final02_2011\16393-bt2.dgn