TYPICAL STAGING DETAIL FOR DRILLED SHAFTS

(SHOWN FOR BENT 3)

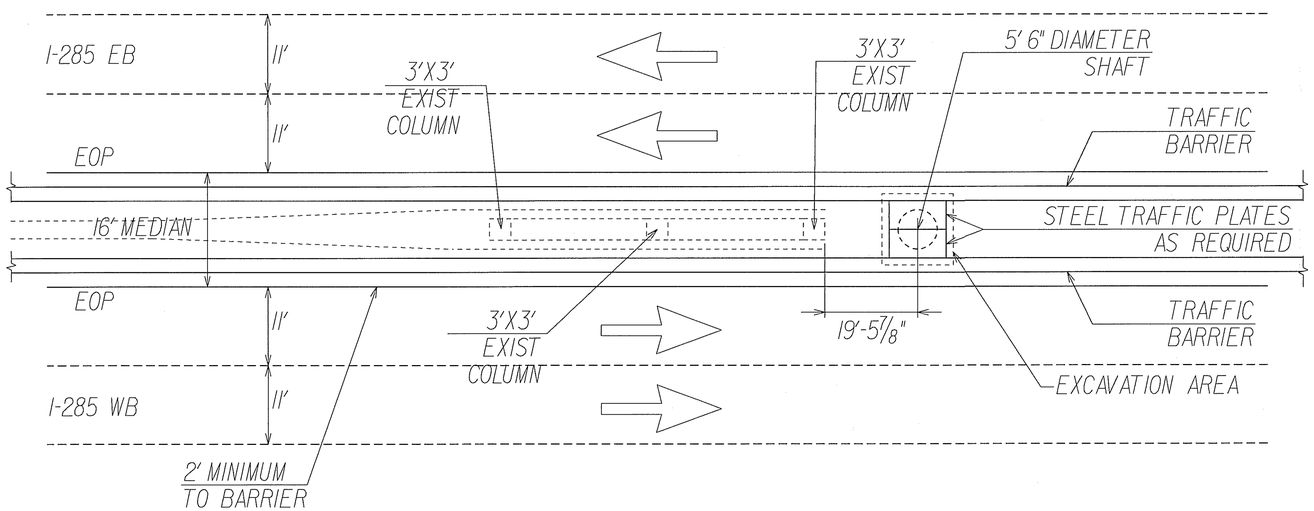

NOTES:

- DRILLED SHAFT CONSTRUCTION SHALL BE PERFORMED USING A SINGLE LANE CLOSURE PER DIRECTION ON I-285 DURING THE TIME PERIODS SPECIFIED IN THE CONTRACT. (SEE CONST STAGING SHEETS FOR STAGE IC)

- CONTRACTOR SHALL PLACE COMPACTED GAB, STEEL PLATE, AND HIGH EARLY STRENGTH CONCRETE OR ASPHALTIC CONC IN EXCAVATED AREA AS SHOWN WITH TRAFFIC BARRIERS IN PLACE BEFORE OPENING ALL I-285 LANES TO TRAFFIC. ALL COSTS ASSOCIATED WITH PATCHING AND PLATING SHALL BE INCLUDED IN THE OVERALL BID FOR TRAFFIC CONTROL, LUMP SUM.

- ALL COLUMN FORMWORK ERECTION, REINFORCING STEEL PLACEMENT, CONCRETE POURING AND FORMWORK STRIPPING SHALL OCCUR OVER ONE WEEKEND DURING THE TIMES ALLOWED IN THE CONTRACT.

- INDIVIDUAL PRECAST BRIDGE CAP ELEMENTS SHALL ALSO BE PLACED OVER ONE WEEKEND DURING THE TIMES ALLOWED IN THE CONTRACT.

- THE CONTRACTOR MAY ELECT TO USE DEPARTMENT APPROVED 24" TRAFFIC BARRIER.

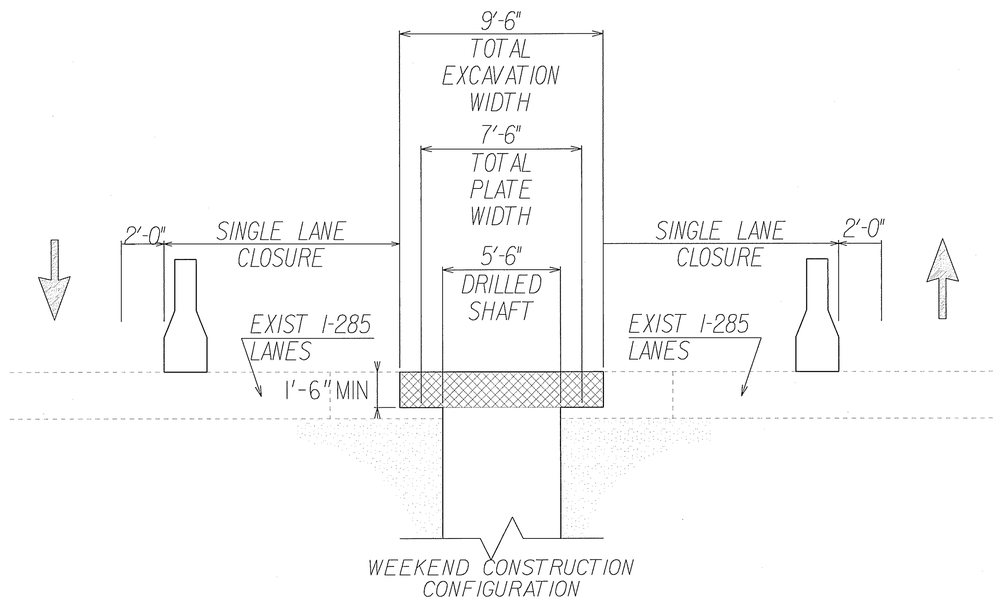

WEEKEND CONSTRUCTION CONFIGURATION

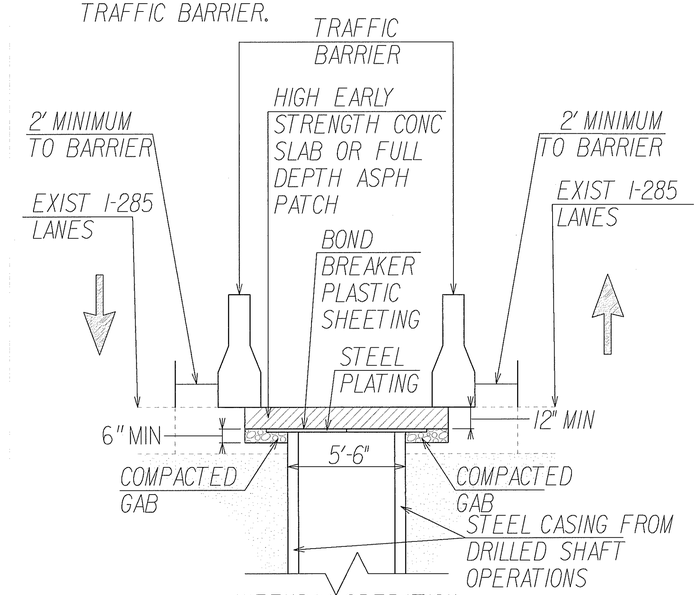

WEEKDAY OPERATION CONFIGURATION

ARCADIS
Infrastructure, environment, buildings

REVISION DATES		
02/10/11		

STATE OF GEORGIA
DEPARTMENT OF TRANSPORTATION
OFFICE:
CONSTRUCTION STAGING
STAGE 1 **PLAN**
ROSWELL ROAD OVER I-285
BRIDGE WIDENING

DRAWING No. 19-02

3/1/2007 GPLN