STATE	PROJECT NUMBER	SHEET NO.	TOTAL SHEETS
GA.	CSSFT-0008-00(940)	91	114

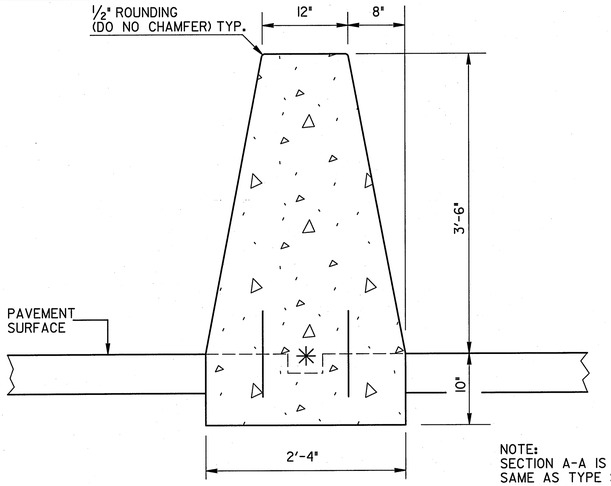

NOTE:
SECTION A-A IS THE SAME AS TYPE S-I. (SEE SEPARATE SHEET)

SECTION A-A

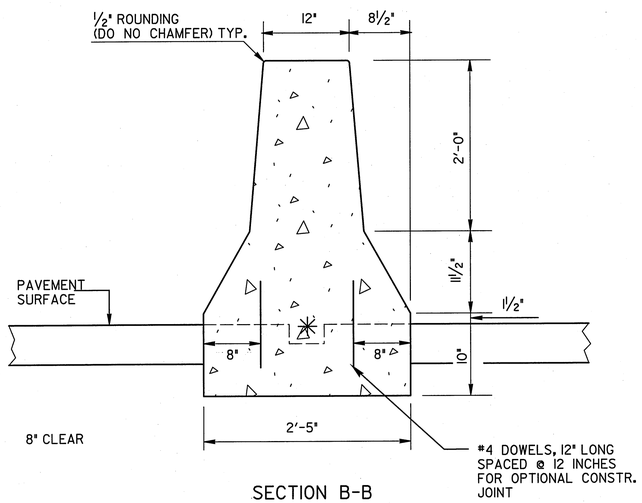

SECTION B-B

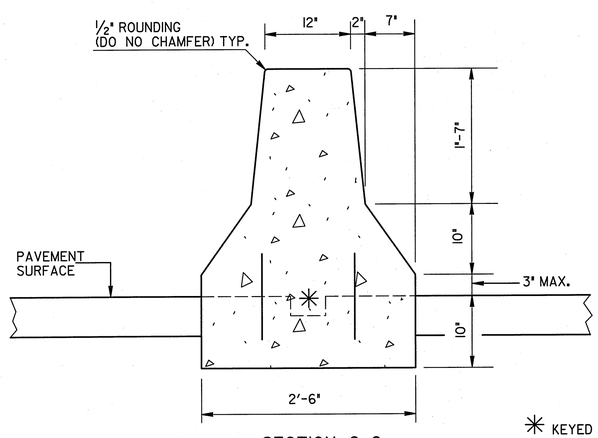

NOTE:
SECTION C-C IS THE SAME AS TYPE 20. (SEE STD. NO. 4961)

SECTION C-C

✳ KEYED CONSTR. JT. (OPTIONAL) TO BE THE SIZE OF A NOM. 2"×4".

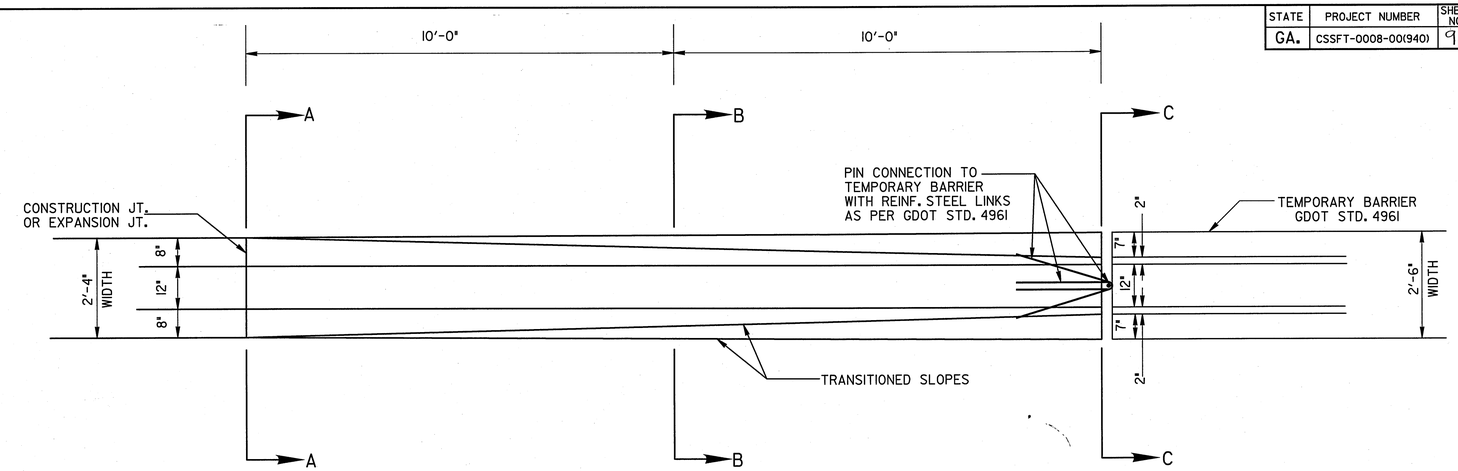

PLAN VIEW

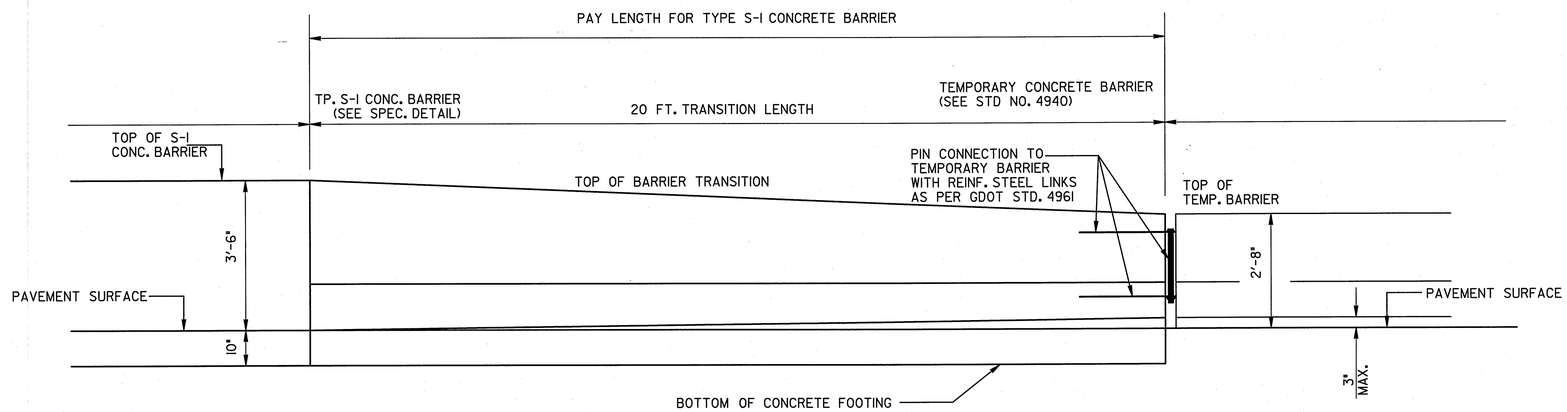

ELEVATION

NOTE:
DETAILS, NOTES, ETC. NOT SHOWN HEREON SHALL BE ACCORDING TO STANDARD NO. 4940, 4961 AND SPECIAL DESIGN DETAIL FOR S BARRIER.

GENERAL NOTES:

1. SPECIFICATIONS: GEORGIA STANDARD CURRENT EDITION, AND SUPPLEMENTS THERETO.
2. ALL CONCRETE SHALL BE CLASS "A". REINFORCING STEEL SHALL BE GRADE 60. EXPOSED CONCRETE SURFACES SHALL RECEIVE A TYPE III FINISH. SEE SECTION 500.

DATE	DEPARTMENT OF TRANSPORTATION STATE OF GEORGIA		
REVISION	CONSTRUCTION DETAIL CONCRETE MEDIAN BARRIER TRANSITION TYPE S-I TO TEMPORARY BARRIER P.I. NO. 0008940 SR 25 SPUR EAST/TORRAS CAUSEWAY FROM SR 25 TO CR 584/KINGS WAY CSSFT-0008-00(940) NO SCALE	JANUARY, 2010	
BY			38-02