RELEASED FOR CONSTRUCTION: 08/02/2013
USE ON CONSTRUCTION: 02/25/2016

STATE	PROJECT NUMBER	SHEET NO.	TOTAL SHEETS
GA.	CSMSL-0008-00(690)	527A	730

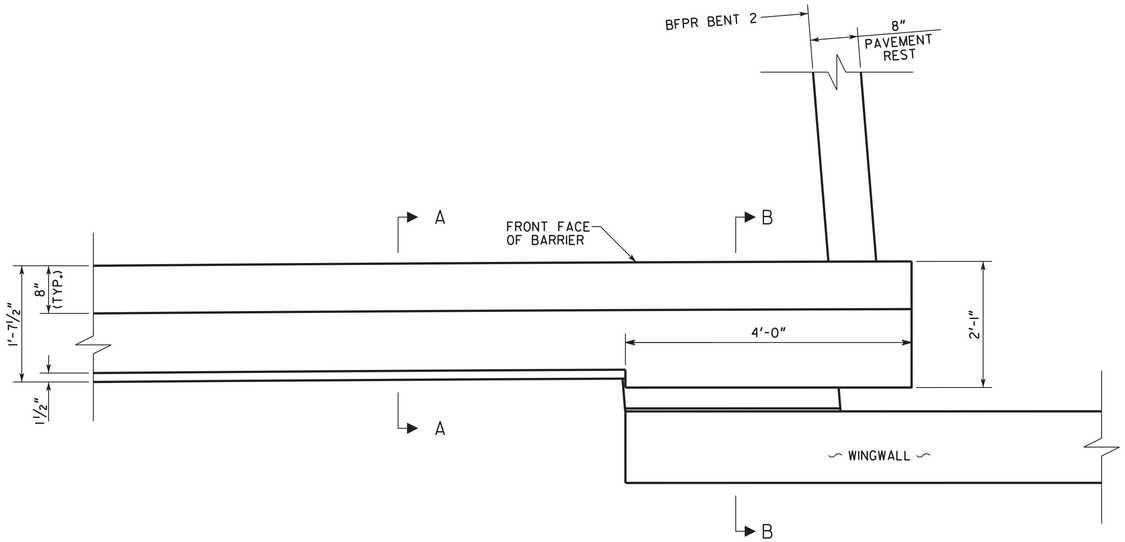

BARRIER DETAIL AT BENT 2 RIGHT
NO SCALE

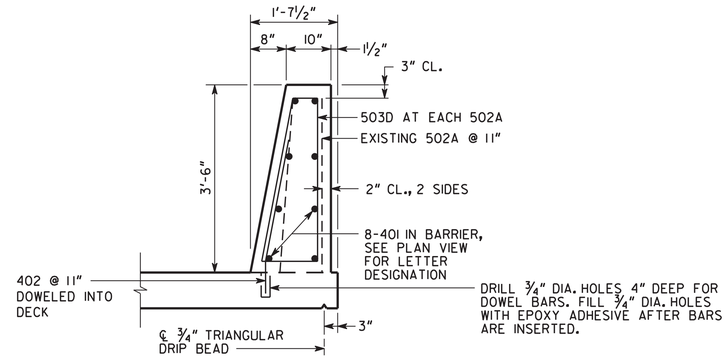

SECTION A-A
NO SCALE

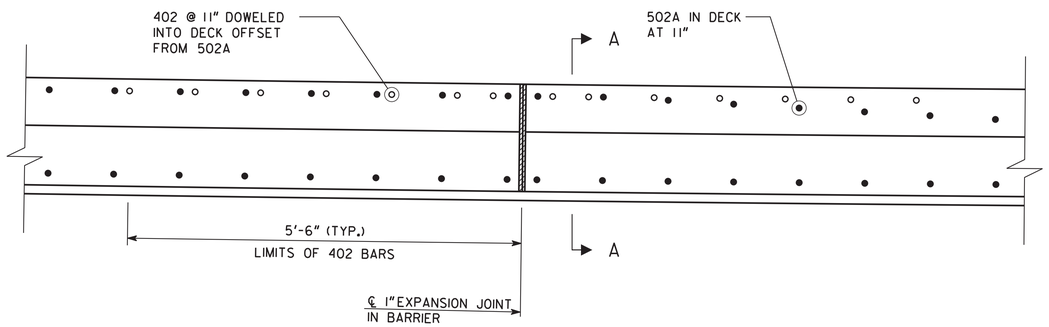

"DETAIL A"
NO SCALE

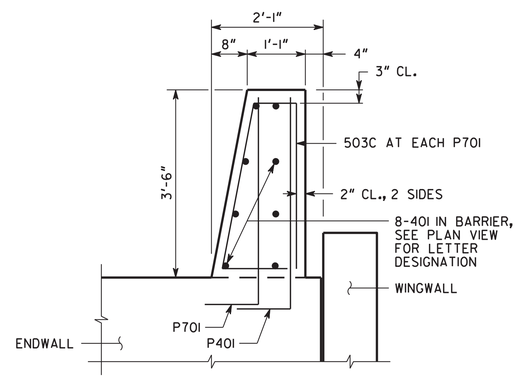

SECTION B-B
NO SCALE

BRIDGE NO. 6

THE LPA GROUP
A UNIT OF MICHAEL BAKER CORPORATION

THE LPA GROUP INCORPORATED
TRANSPORTATION CONSULTANTS
3595 ENGINEERING DRIVE
NORCROSS, GEORGIA 30092
(770) 263-9118

GEORGIA
DEPARTMENT OF TRANSPORTATION
ENGINEERING DIVISION-OFFICE OF BRIDGES AND STRUCTURES

BARRIER DETAILS
JIMMY DELOACH CONNECTOR
OVER SONNY DIXON INTERCHANGE
CHATHAM COUNTY CSMSL-0008-00(690)

BY	REVISIONS	DATE
BSB	BARRIER REINF. ADJUSTED	02/25/2016

DRAWING NO. 35-056A
BRIDGE SHEET 3A OF 11

SCALE: AS SHOWN
AUGUST 2013

DESIGNED JCR	CHECKED ANZ/AWB	REVIEWED DLC/WMD
DRAWN JCR	DESIGN GROUP SKG	APPROVED BFR

1 INCH WHEN PRINTED FULL SIZE

4/6/2016 2:19:53 PM R:\126379\Bridge\PIERCE\final\B0603A-DP.dgn