RELEASED FOR CONSTRUCTION: 05/21/2013
USE ON CONSTRUCTION: 08/01/2014

STATE	PROJECT NUMBER	SHEET NO.	TOTAL SHEETS
GA.	CSMSL-0008-00(690)	497A	730

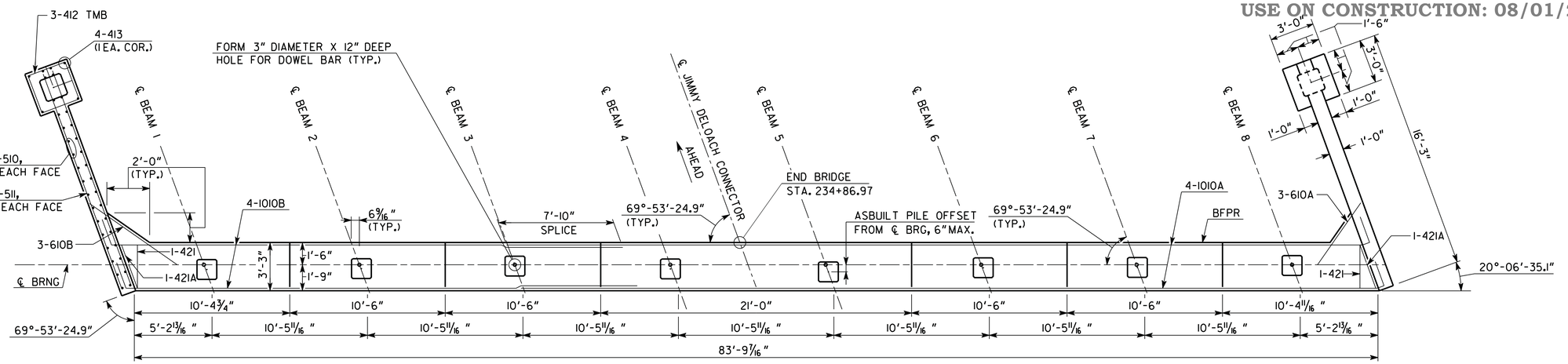

PLAN - BENT 2

SCALE: 1/4" = 1'-0"

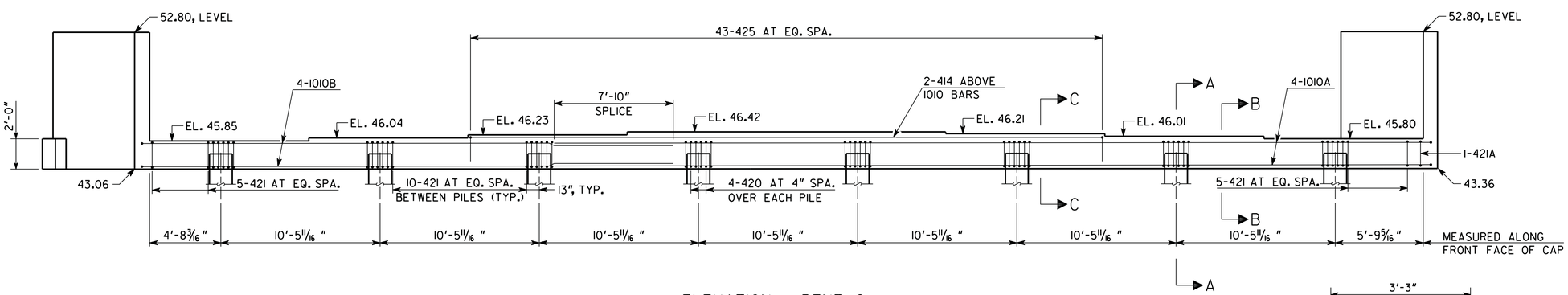

ELEVATION - BENT 2

(LOOKING AHEAD)

SCALE: 1/4" = 1'-0"

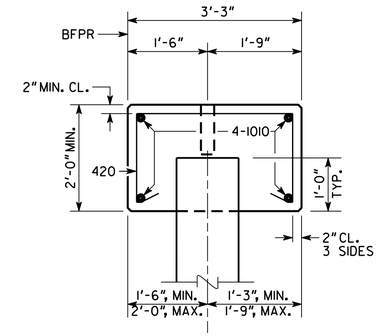

SECTION A-A

SCALE: 3/4" = 1'-0"

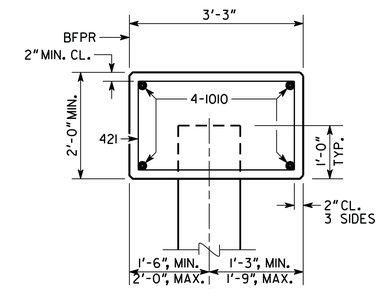

SECTION B-B

SCALE: 3/4" = 1'-0"

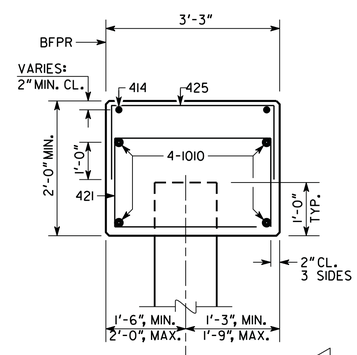

SECTION C-C

SCALE: 3/4" = 1'-0"

PLAN DRIVING OBJECTIVE

ALL PILES SHALL BE DRIVEN TO A DRIVING RESISTANCE OF 490 TONS AFTER A MINIMUM TIP ELEVATION OF 1.00 IS ACHEIVED

ALL PILES SHALL BE 18" SQ. PSC

NEW SHEET

NOTES:

1. MAINTAIN 2" CLEARANCE ON ALL REINFORCEMENT UNLESS OTHERWISE NOTED.
2. POUR WINGWALLS MONOLITHICALLY WITH THE CAP.
3. SEE GEORGIA STANDARD 9037 FOR DRAINAGE DETAILS AT END BENT.
4. WINGWALL PILES NOT SHOWN IN ELEVATION.
5. BOTTOM OF WINGWALLS ARE LEVEL.

SUBSTRUCTURE QUANTITIES

ITEM	BENT 2
CY CLASS "A" CONCRETE	~~32.6~~ 34.4
LB BAR REINF STEEL	~~3,902~~ 3,905

REVISIONS	BY	DATE
ADDITIONAL CAP WIDTH	BSB	08/07/2014

BRIDGE NO. 2

THE LPA GROUP — A UNIT OF CONSULTING ENGINEERS CORPORATION

THE LPA GROUP INCORPORATED
TRANSPORTATION CONSULTANTS
3595 ENGINEERING DRIVE
NORCROSS, GEORGIA 30092
(770) 263-9118

GEORGIA
DEPARTMENT OF TRANSPORTATION
ENGINEERING DIVISION-OFFICE OF BRIDGES AND STRUCTURES

END BENT 2 DETAILS
JIMMY DELOACH CONNECTOR
OVER CROSSGATE ROAD
CHATHAM COUNTY CSMSL-0008-00(690)

DRAWING NO. 35-16A
BRIDGE SHEET 7A OF 9

SCALE: AS SHOWN — MAY 2013

DESIGNED BSB — CHECKED ANZ — REVIEWED DLC/WMD
DRAWN BSB — DESIGN GROUP AWB/SKG — APPROVED BFR

1 INCH WHEN PRINTED FULL SIZE

9/12/2014 12:03:21 PM R:\126379\Bridge\CROSSGATE\final\B0207A-BT2.dgn