RELEASED FOR CONSTRUCTION - 07-23-13

STATE	PROJECT NUMBER	SHEET NO.	TOTAL SHEETS
GA.			

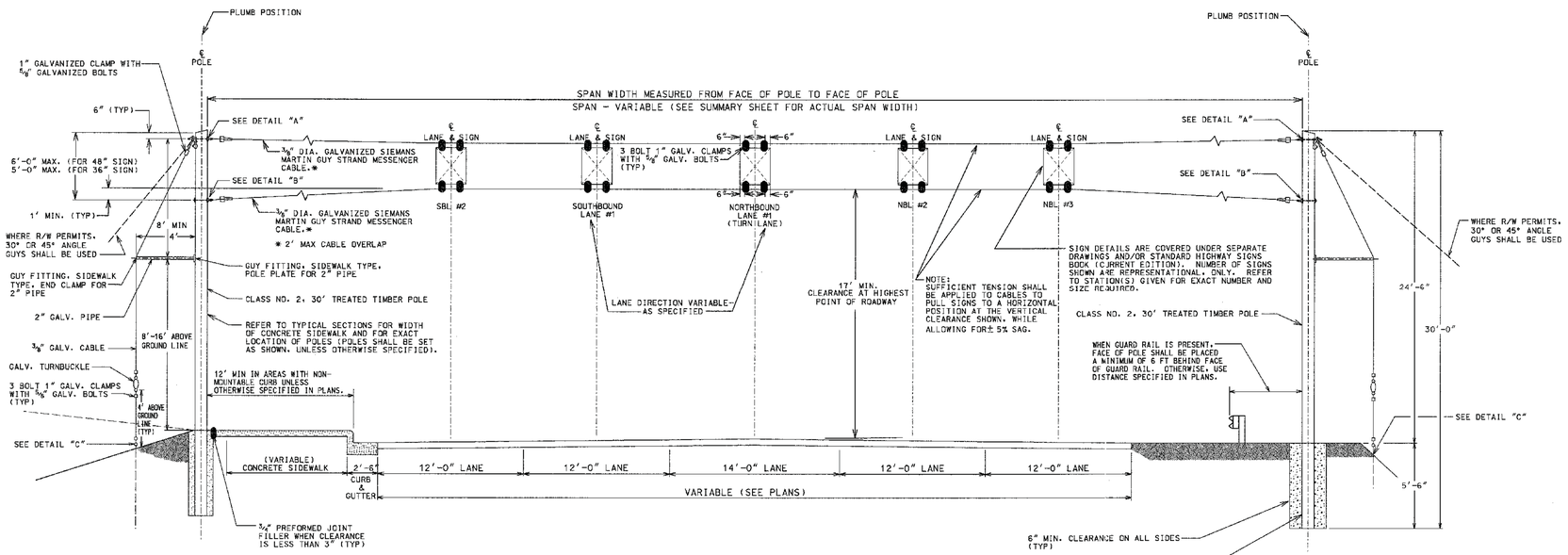

ROADWAY SECTION WITH NON-MOUNTABLE CURB

ROADWAY SECTION WITHOUT CURB

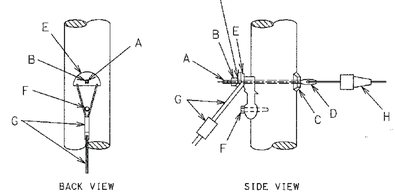

DETAIL "A"
(SEE PARTS LIST)

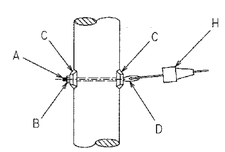

DETAIL "B"
(SEE PARTS LIST)

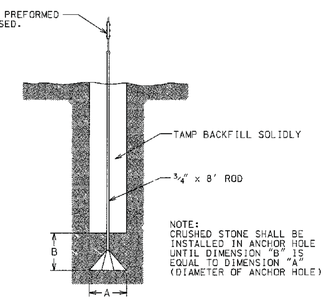

DETAIL "C"
(INSTALLATION SHOWN FOR 8" CONE TYPE GUY ANCHOR (6M). COMPARABLE SCREW TYPE (6M) MAY BE USED)

A	3/4" SPACE BOLTS
B	3/4" M F LOCKNUTS
C	4" x 4" CURVED WASHERS, 13/16" HOLE
D	3/4" THIMBLE EYE NUT
E	HEAVY DUTY GUY HOOK
F	1/2" x 4" LAG SCREW
G	3/8" GLAV. CABLE AND CLAMPS
H	STRANDVISE

NOTE: PREFORMED CABLE GRIPS MAY BE USED IN LIEU OF CABLE CLAMPS.

PARTS LIST

DATE	REVISIONS

GEORGIA DEPARTMENT OF TRANSPORTATION
OFFICE OF TRAFFIC SAFETY & DESIGN

DETAILS OF TIMBER POLE ERECTION FOR OVERHEAD SIGNS

NO SCALE — JANUARY 2000

T-3D

THE LPA GROUP
TRANSPORTATION CONSULTANTS
3595 ENGINEERING DRIVE
NORCROSS, GEORGIA 30092
(770) 263-9118

REVISION DATES

STATE OF GEORGIA
DEPARTMENT OF TRANSPORTATION
OFFICE: INNOVATIVE PROGRAM DELIVERY
CONSTRUCTION DETAILS

DRAWING No. 40-026

3/1/2007 GPLN