STATE	PROJECT NUMBER	SHEET NO.	TOTAL SHEETS
GA.	CSMSL-0008-00(690)	519	730

USE ON CONSTRUCTION: 08/01/2014

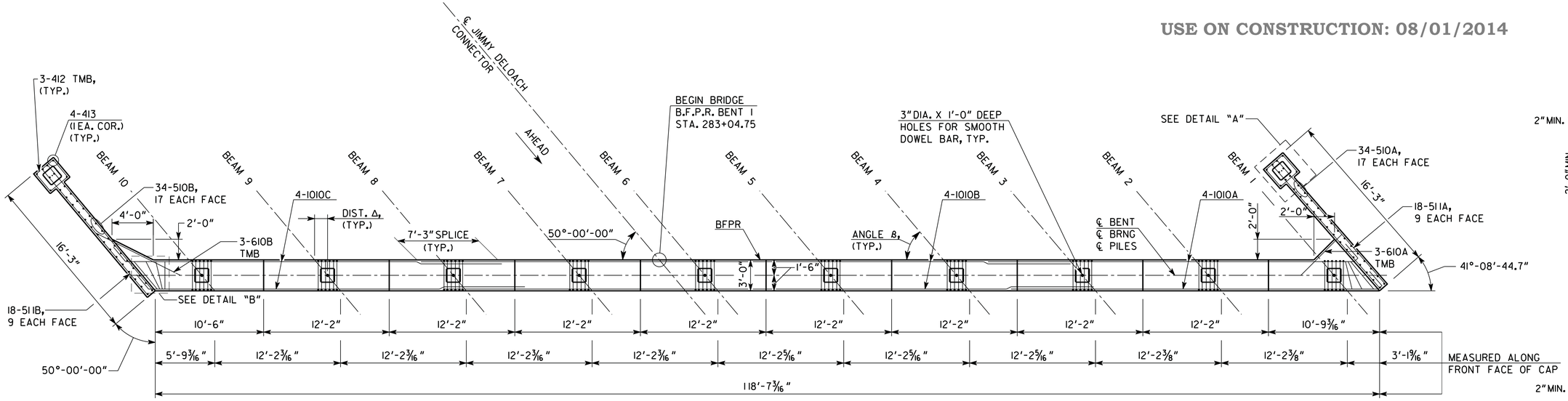

	BEAM 1	BEAM 2	BEAM 3	BEAM 4	BEAM 5	BEAM 6-10
Δ	1'-3 7/16"	1'-3 5/16"	1'-3 1/4"	1'-3 3/16"	1'-3 1/8"	1'-3 1/8"
β	49°-25'-00.3"	49°-34'-46.0"	49°-43'-07.2"	49°-50'-06.0"	49°-55'-42.2"	50°-00'-00"

PLAN - BENT 1
SCALE: 3/16" = 1'-0"

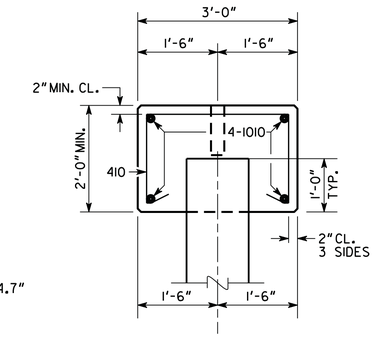

SECTION A-A
SCALE: 3/4" = 1'-0"

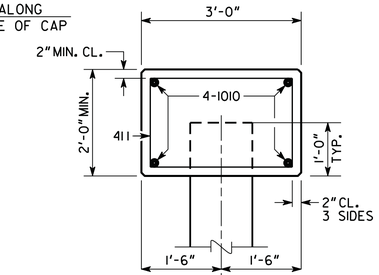

SECTION B-B
SCALE: 3/4" = 1'-0"

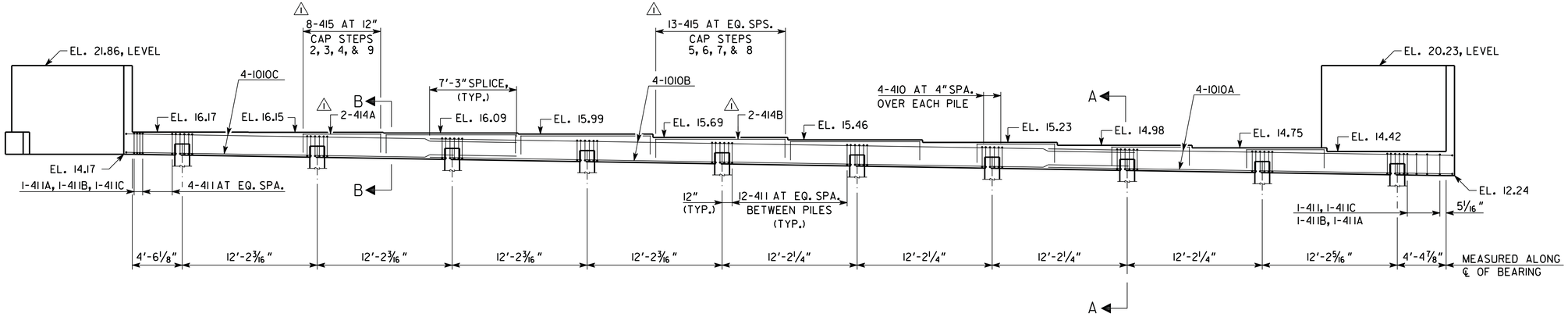

ELEVATION - BENT 1
(LOOKING BACK)
SCALE: 3/16" = 1'-0"

PLAN DRIVING OBJECTIVE

ALL PILES SHALL BE DRIVEN TO A DRIVING RESISTANCE OF 326 TONS AFTER A MINIMUM TIP ELEVATION OF -23.00 IS ACHIEVED.

ALL PILES SHALL BE 16" SQ. PSC

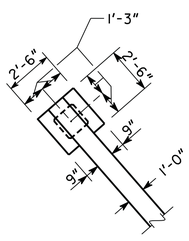

DETAIL "A"
NOT TO SCALE

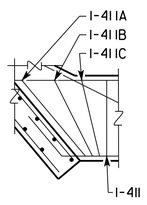

NOTE: MIRROR DETAIL FOR OPPOSITE END OF BENT

DETAIL "B"
NOT TO SCALE

NOTES:

1. MAINTAIN 2" CLEARANCE ON ALL REINFORCEMENT UNLESS OTHERWISE NOTED.
2. POUR WINGWALLS MONOLITHICALLY WITH THE CAP.
3. SEE GEORGIA STANDARD 9037 FOR DRAINAGE DETAILS AT END BENT.
4. WINGWALL PILES NOT SHOWN IN ELEVATION.
5. BOTTOM OF WINGWALLS ARE LEVEL.
6. PILES DESIGNED FOR A MAXIMUM FACTORED AXIAL LOAD OF 173 TONS.

SUBSTRUCTURE QUANTITIES	
ITEM	BENT 1
CY CLASS AA CONCRETE	39.4
LB BAR REINF STEEL	~~4,271~~ 4,694

BRIDGE NO. 5

THE LPA GROUP
A UNIT OF CARDINAL DESIGN CORPORATION

THE LPA GROUP INCORPORATED
TRANSPORTATION CONSULTANTS
3595 ENGINEERING DRIVE
NORCROSS, GEORGIA 30092
(770) 263-9118

GEORGIA
DEPARTMENT OF TRANSPORTATION
ENGINEERING DIVISION-OFFICE OF BRIDGES AND STRUCTURES

END BENT 1 DETAILS
JIMMY DELOACH CONNECTOR
OVER TRIBUTARY TO ST. AUGUSTINE CREEK
CHATHAM COUNTY CSMSL-0008-00(690)

REVISIONS	BY	DATE
ADDITIONAL CAP STEEL	JCR	08/01/2014

DRAWING NO. 35-048
BRIDGE SHEET 11 OF 16

SCALE: AS SHOWN
AUGUST 2013

DESIGNED JCW
DRAWN JCW/BSB
CHECKED JPS/ANZ
DESIGN GROUP SKG
REVIEWED DLC/WMD
APPROVED BFR

1 INCH WHEN PRINTED FULL SIZE

9/12/2014 11:49:42 AM R:\126379\Bridge\WETLANDS\final\B05II-BT.dgn