VOID

RELEASED FOR CONSTRUCTION: 08/02/2013

STATE	PROJECT NUMBER	SHEET NO.	TOTAL SHEETS
GA.	CSMSL-0008-00(690)	519	730

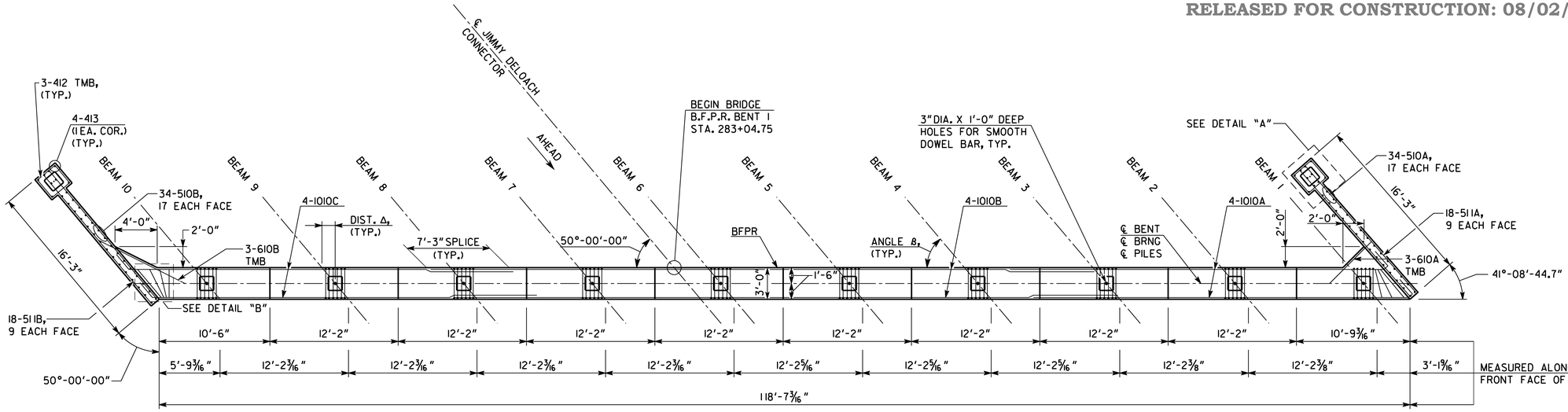

	BEAM 1	BEAM 2	BEAM 3	BEAM 4	BEAM 5	BEAM 6-10
Δ	1'-3 7/16"	1'-3 5/16"	1'-3 1/4"	1'-3 3/16"	1'-3 1/8"	1'-3 1/8"
β	49°-25'-00.3"	49°-34'-46.0"	49°-43'-07.2"	49°-50'-06.0"	49°-55'-42.2"	50°-00'-00"

PLAN - BENT 1
SCALE: 3/16" = 1'-0"

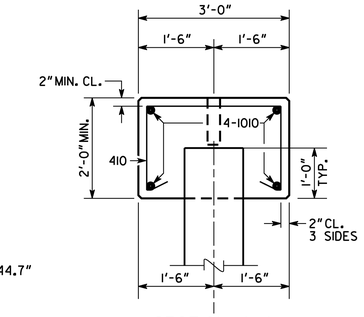

SECTION A-A
SCALE: 3/4" = 1'-0"

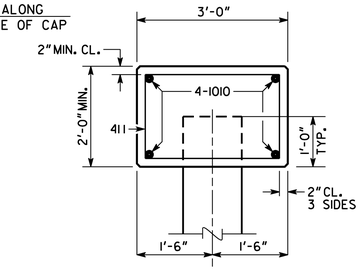

SECTION B-B
SCALE: 3/4" = 1'-0"

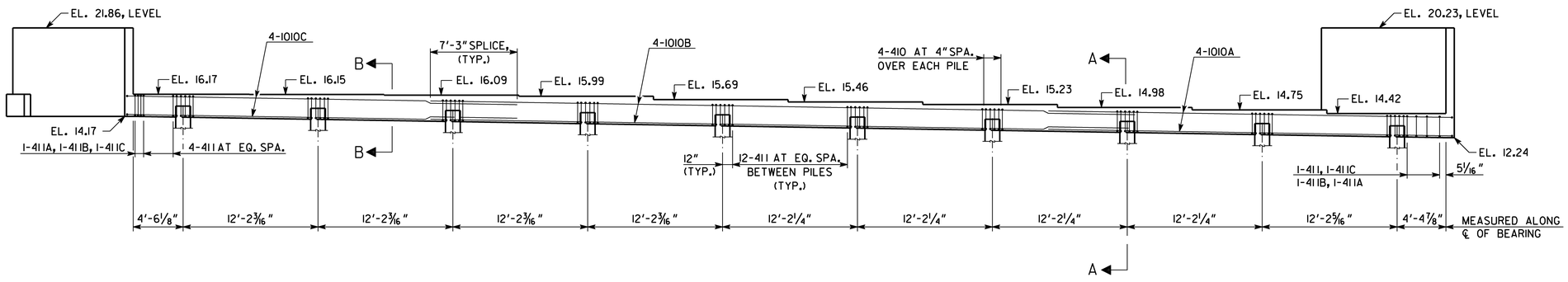

ELEVATION - BENT 1
(LOOKING BACK)
SCALE: 3/16" = 1'-0"

PLAN DRIVING OBJECTIVE

ALL PILES SHALL BE DRIVEN TO A DRIVING RESISTANCE OF 326 TONS AFTER A MINIMUM TIP ELEVATION OF -23.00 IS ACHIEVED.

ALL PILES SHALL BE 16" SQ. PSC

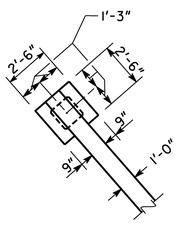

DETAIL "A"
NOT TO SCALE

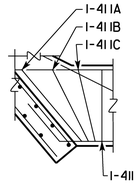

NOTE: MIRROR DETAIL FOR OPPOSITE END OF BENT

DETAIL "B"
NOT TO SCALE

NOTES:

1. MAINTAIN 2" CLEARANCE ON ALL REINFORCEMENT UNLESS OTHERWISE NOTED.
2. POUR WINGWALLS MONOLITHICALLY WITH THE CAP.
3. SEE GEORGIA STANDARD 9037 FOR DRAINAGE DETAILS AT END BENT.
4. WINGWALL PILES NOT SHOWN IN ELEVATION.
5. BOTTOM OF WINGWALLS ARE LEVEL.
6. PILES DESIGNED FOR A MAXIMUM FACTORED AXIAL LOAD OF 173 TONS.

SUBSTRUCTURE QUANTITIES

ITEM	BENT 1
CY CLASS AA CONCRETE	39.4
LB BAR REINF STEEL	4,271

BRIDGE NO. 5

THE LPA GROUP
A UNIT OF CONSULT ENGINEERING CORPORATION
THE LPA GROUP INCORPORATED
TRANSPORTATION CONSULTANTS
3595 ENGINEERING DRIVE
NORCROSS, GEORGIA 30092
(770) 263-9118

GEORGIA
DEPARTMENT OF TRANSPORTATION
ENGINEERING DIVISION-OFFICE OF BRIDGES AND STRUCTURES

END BENT 1 DETAILS
JIMMY DELOACH CONNECTOR
OVER TRIBUTARY TO ST. AUGUSTINE CREEK
CHATHAM COUNTY CSMSL-0008-00(690)

SCALE: AS SHOWN JULY 2013

DRAWING NO. 35-048
BRIDGE SHEET 11 OF 16

REVISIONS | DATE | BY

DESIGNED JCW | CHECKED JPS/ANZ | REVIEWED DLC/WMD
DRAWN JCW/BSB | DESIGN GROUP SKG | APPROVED BFR

1 INCH WHEN PRINTED FULL SIZE

8/6/2013 1:40:24 PM R:\126379\Bridge\WETLANDS\final\B051I-BT.dgn