VOID

RELEASED FOR CONSTRUCTION: 05/21/2013

STATE	PROJECT NUMBER	SHEET NO.	TOTAL SHEETS
GA.	CSMSL-0008-00(690)	502	730

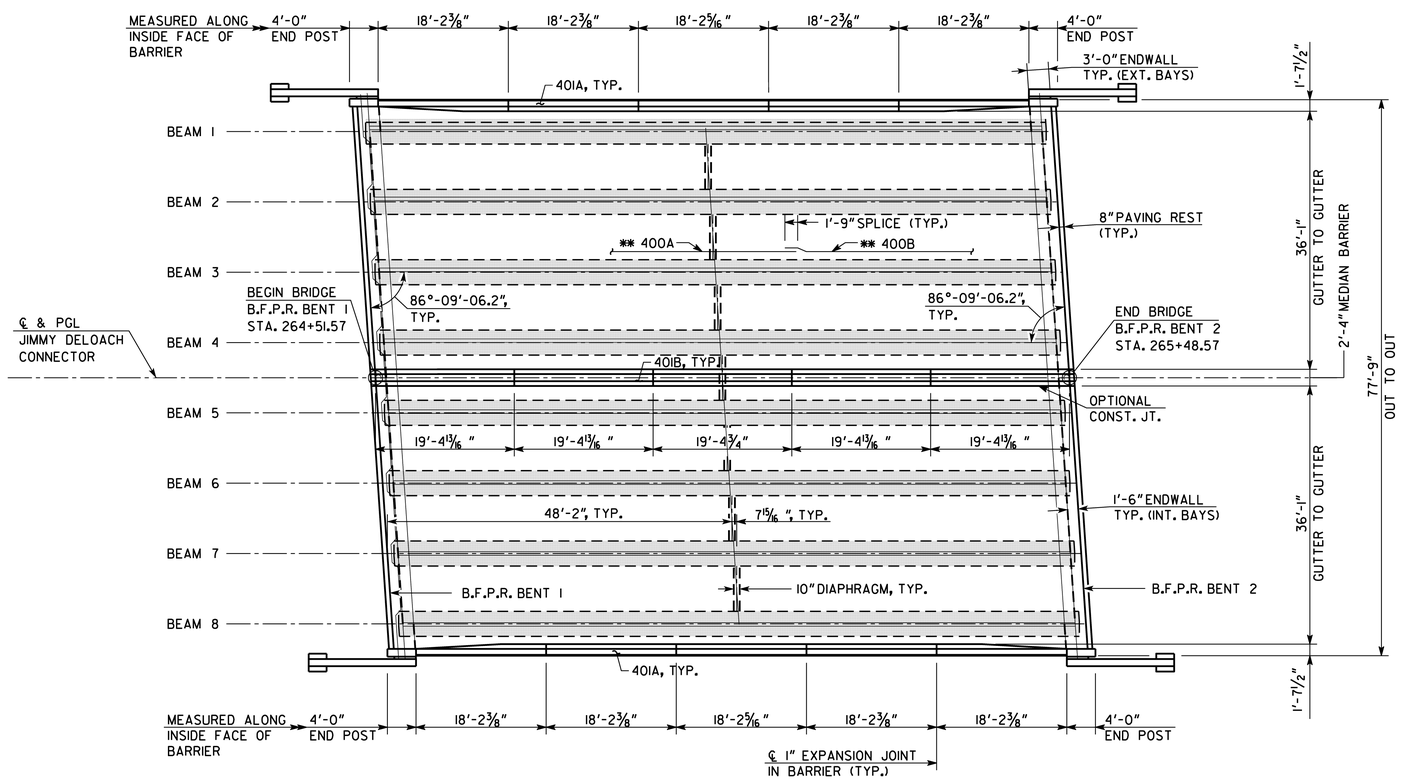

PLAN

SCALE: 1" = 10'-0"

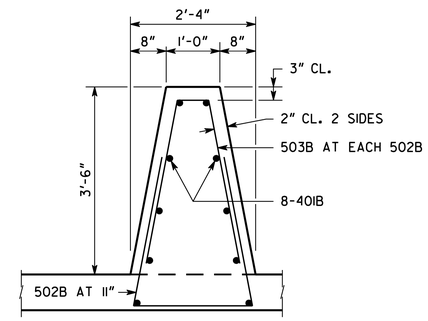

MEDIAN BARRIER DETAIL

NO SCALE

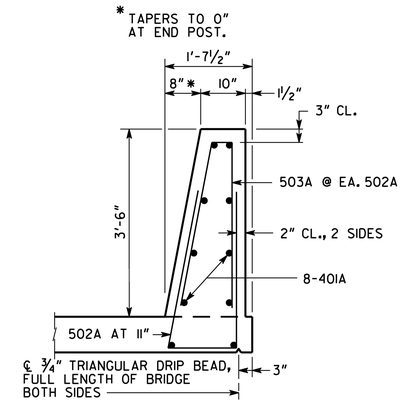

BARRIER DETAIL

NO SCALE

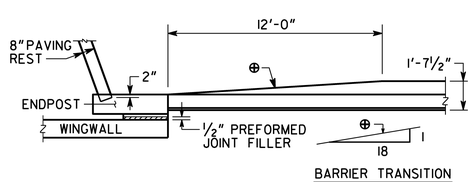

BARRIER TRANSITION DETAIL

NO SCALE

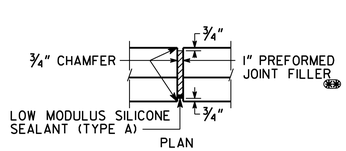

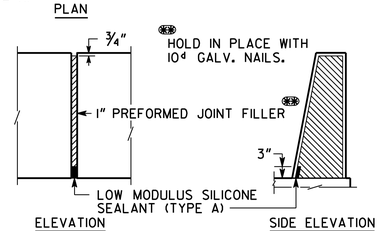

DETAILS OF 1" EXPANSION JOINT IN BARRIER

NO SCALE

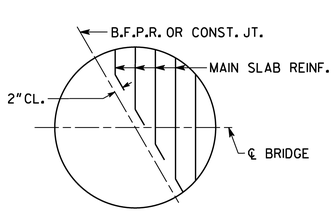

AT B.F.P.R. OR CONST. JOINT

BARS ARE DETAILED IN BAR DETAILS AS EQUIVALENT FULL LENGTH BARS.

BAR BENDING DETAILS AT SKEWED JOINTS

NO SCALE

SUPERSTRUCTURE QUANTITIES

ITEM	TOTAL
LUMP - SUPERSTR. CONCRETE, CU YDS., CLASS D	315.3
LUMP - SUPERSTR. REINF. STEEL, LBS.	61,887

NOTE: MAINTAIN 2" CLEARANCE ON ALL REINFORCEMENT UNLESS OTHERWISE NOTED.

** ALTERNATE 400A AND 400B BARS ACROSS DECK TO STAGGER LAP LOCATION.

BRIDGE NO. 4

THE LPA GROUP

THE LPA GROUP INCORPORATED
TRANSPORTATION CONSULTANTS
3595 ENGINEERING DRIVE
NORCROSS, GEORGIA 30092
(770) 263-9118

GEORGIA

DEPARTMENT OF TRANSPORTATION

ENGINEERING DIVISION-OFFICE OF BRIDGES AND STRUCTURES

DECK PLAN
JIMMY DELOACH CONNECTOR
OVER SR 30 (BONNYBRIDGE ROAD)
CHATHAM COUNTY CSMSL-0008-00(690)

SCALE: AS SHOWN JULY 2013

DRAWING NO. 35-31

BRIDGE SHEET 3 OF 9

DATE | REVISIONS | BY

DESIGNED BSB | CHECKED ANZ | REVIEWED DLC/WMD
DRAWN BSB | DESIGN GROUP AWB/SKG | APPROVED BFR

1 INCH WHEN PRINTED FULL SIZE

8/6/2013 1:39:45 PM R:\126379\Bridge\BONNYBRIDGE\final\B0403-DP.dgn