RELEASED FOR CONSTRUCTION: 05/21/2013
USE ON CONSTRUCTION: 08/01/2014

STATE	PROJECT NUMBER	SHEET NO.	TOTAL SHEETS
GA.	CSMSL-0008-00(690)	497	730

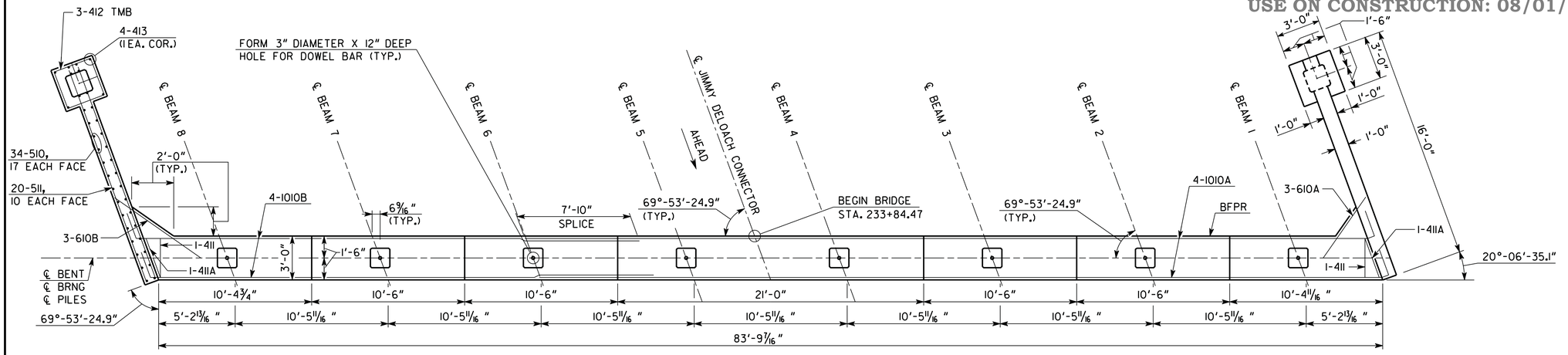

PLAN - BENT 1
SCALE: 1/4" = 1'-0"

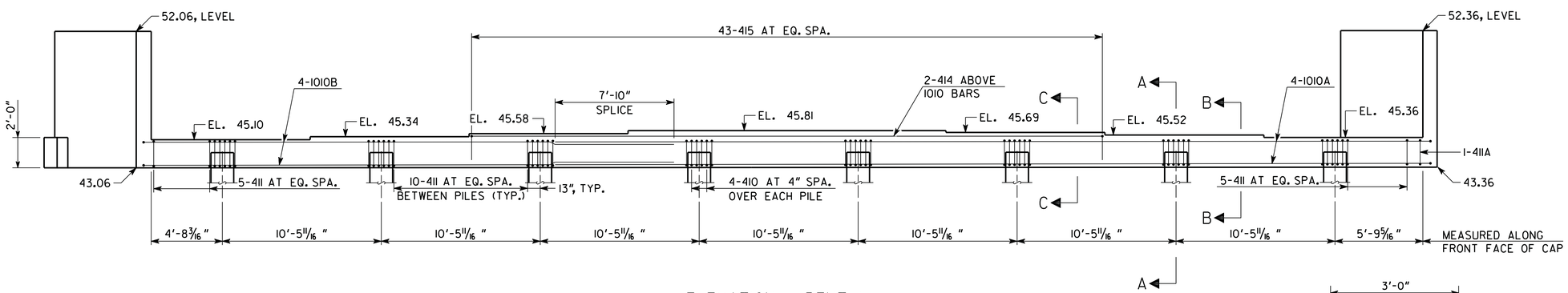

ELEVATION - BENT 1
(LOOKING BACK)
SCALE: 1/4" = 1'-0"

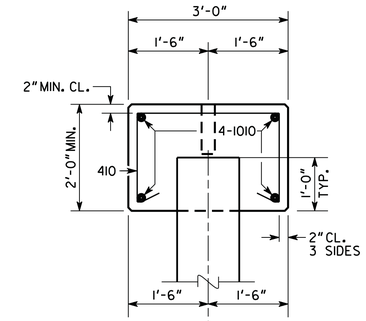

SECTION A-A
SCALE: 3/4" = 1'-0"

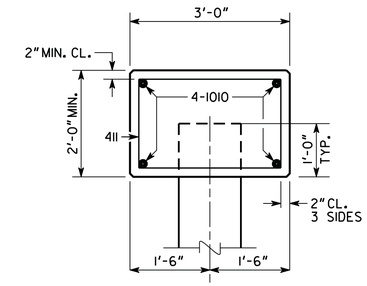

SECTION B-B
SCALE: 3/4" = 1'-0"

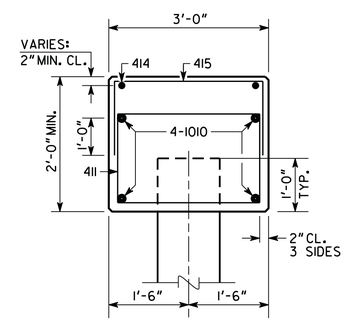

SECTION C-C
SCALE: 3/4" = 1'-0"

PLAN DRIVING OBJECTIVE

ALL PILES SHALL BE DRIVEN TO A DRIVING RESISTANCE OF 428 TONS AFTER A MINIMUM TIP ELEVATION OF -17.00 IS ACHEIVED

ALL PILES SHALL BE 18" SQ. PSC

BENT 2 DETAILS MOVED TO SHEET 7A

NOTES:

1. MAINTAIN 2" CLEARANCE ON ALL REINFORCEMENT UNLESS OTHERWISE NOTED.
2. POUR WINGWALLS MONOLITHICALLY WITH THE CAP.
3. SEE GEORGIA STANDARD 9037 FOR DRAINAGE DETAILS AT END BENT.
4. WINGWALL PILES NOT SHOWN IN ELEVATION.
5. BOTTOM OF WINGWALLS ARE LEVEL.

SUBSTRUCTURE QUANTITIES	
ITEM	BENT 1
CY CLASS "A" CONCRETE	33.7
LB BAR REINF STEEL	3,902

REVISIONS			DATE
BY	END BENT 1 UNIQUE SHEET		08/01/2014

BRIDGE NO. 2

THE LPA GROUP
A UNIT OF MICHAEL BAKER CORPORATION

THE LPA GROUP INCORPORATED
TRANSPORTATION CONSULTANTS
3595 ENGINEERING DRIVE
NORCROSS, GEORGIA 30092
(770) 263-9118

GEORGIA
DEPARTMENT OF TRANSPORTATION
ENGINEERING DIVISION-OFFICE OF BRIDGES AND STRUCTURES

END BENT 1 DETAILS
JIMMY DELOACH CONNECTOR
OVER CROSSGATE ROAD
CHATHAM COUNTY CSMSL-0008-00(690)

DRAWING NO. 35-16
BRIDGE SHEET 7 OF 9

SCALE: AS SHOWN MAY 2013

DESIGNED BSB CHECKED ANZ REVIEWED DLC/WMD
DRAWN BSB DESIGN GROUP AWB/SKG APPROVED BFR

1 INCH WHEN PRINTED FULL SIZE

9/12/2014 11:49:36 AM R:\126379\Bridge\CROSSGATE\final\B0207-BT1.dgn