VOID

RELEASED FOR CONSTRUCTION: 05/21/2013

STATE	PROJECT NUMBER	SHEET NO.	TOTAL SHEETS
GA.	CSMSL-0008-00(690)	497	730

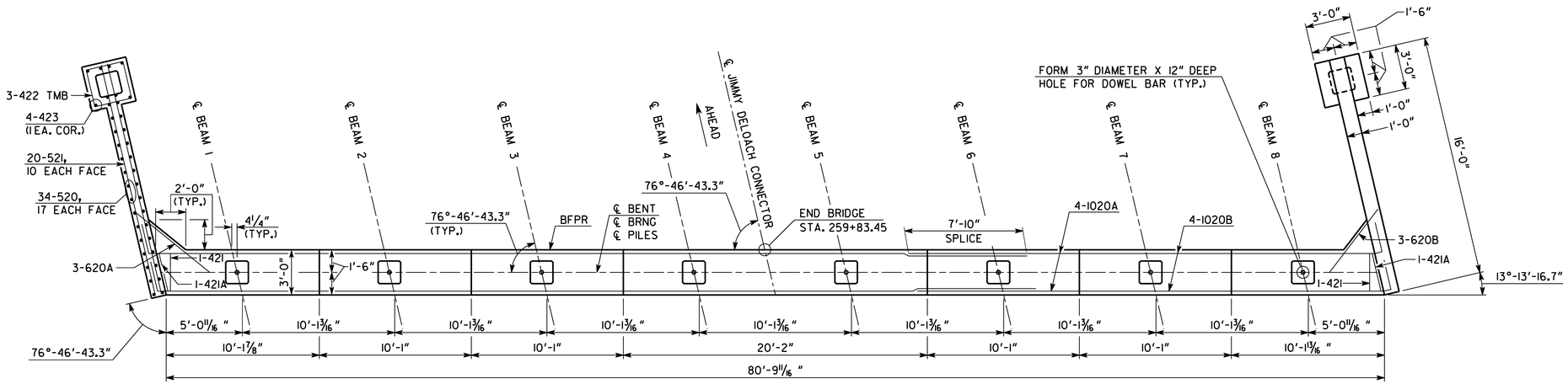

PLAN

SCALE: 1/4" = 1'-0"

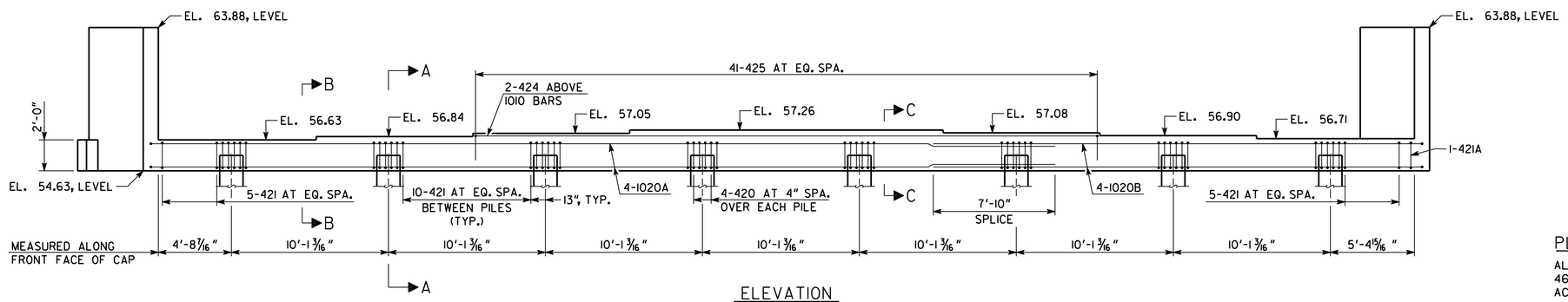

ELEVATION

(LOOKING AHEAD)

SCALE: 1/4" = 1'-0"

PLAN DRIVING OBJECTIVE

ALL PILES SHALL BE DRIVEN TO A DRIVING RESISTANCE OF 464 TONS AFTER A MINIMUM TIP ELEVATION OF -19.00 IS ACHIEVED.

ALL PILES SHALL BE 18" SQ. PSC

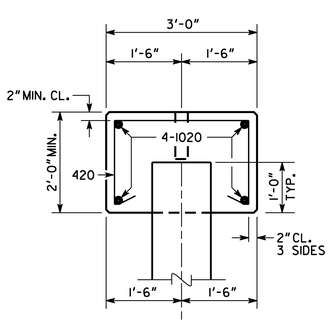

SECTION A-A

SCALE: 3/4" = 1'-0"

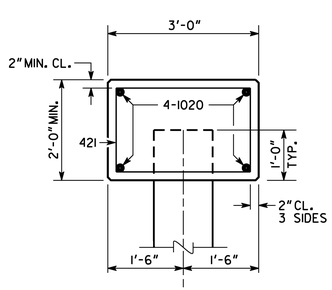

SECTION B-B

SCALE: 3/4" = 1'-0"

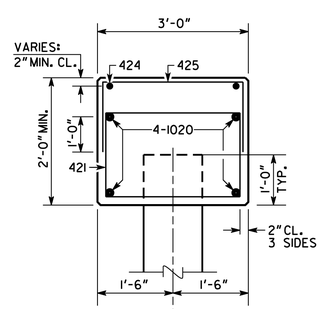

SECTION C-C

SCALE: 3/4" = 1'-0"

NOTES:

1. MAINTAIN 2" CLEARANCE ON ALL REINFORCEMENT UNLESS OTHERWISE NOTED.
2. POUR WINGWALLS MONOLITHICALLY WITH THE CAP.
3. SEE GEORGIA STANDARD 9037 FOR DRAINAGE DETAILS AT END BENT.
4. WINGWALL PILES NOT SHOWN IN ELEVATION.
5. BOTTOM OF WINGWALLS ARE LEVEL.

SUBSTRUCTURE QUANTITIES	
ITEM	BENT 2
CY CLASS "A" CONCRETE	32.3
LB BAR REINF STEEL	3,870

BRIDGE NO. 3

THE LPA GROUP — A UNIT OF CONSULT ALLEN GROUP CORPORATION

THE LPA GROUP INCORPORATED
TRANSPORTATION CONSULTANTS
3595 ENGINEERING DRIVE
NORCROSS, GEORGIA 30092
(770) 263-9118

GEORGIA
DEPARTMENT OF TRANSPORTATION
ENGINEERING DIVISION-OFFICE OF BRIDGES AND STRUCTURES

END BENT 2 DETAILS
JIMMY DELOACH CONNECTOR
OVER NORFOLK SOUTHERN RAILWAY
CHATHAM COUNTY CSMSL-0008-00(690)

SCALE: AS SHOWN JULY 2013

DRAWING NO. 35-26

BRIDGE SHEET 8 OF 10

REVISIONS | DATE | BY

DESIGNED JCR | CHECKED ANZ/AWB | REVIEWED DLC/WMD
DRAWN JCR | DESIGN GROUP SKG | APPROVED BFR

1 INCH WHEN PRINTED FULL SIZE

8/6/2013 1:39:34 PM R:\126379\Bridge\NORFOLK SOUTHERN\final\B0308-BT(2).dgn