RELEASED FOR CONSTRUCTION: 05/21/2013
USE ON CONSTRUCTION: 10/07/2015

STATE	PROJECT NUMBER	SHEET NO.	TOTAL SHEETS
GA.	CSMSL-0008-00(690)	492	730

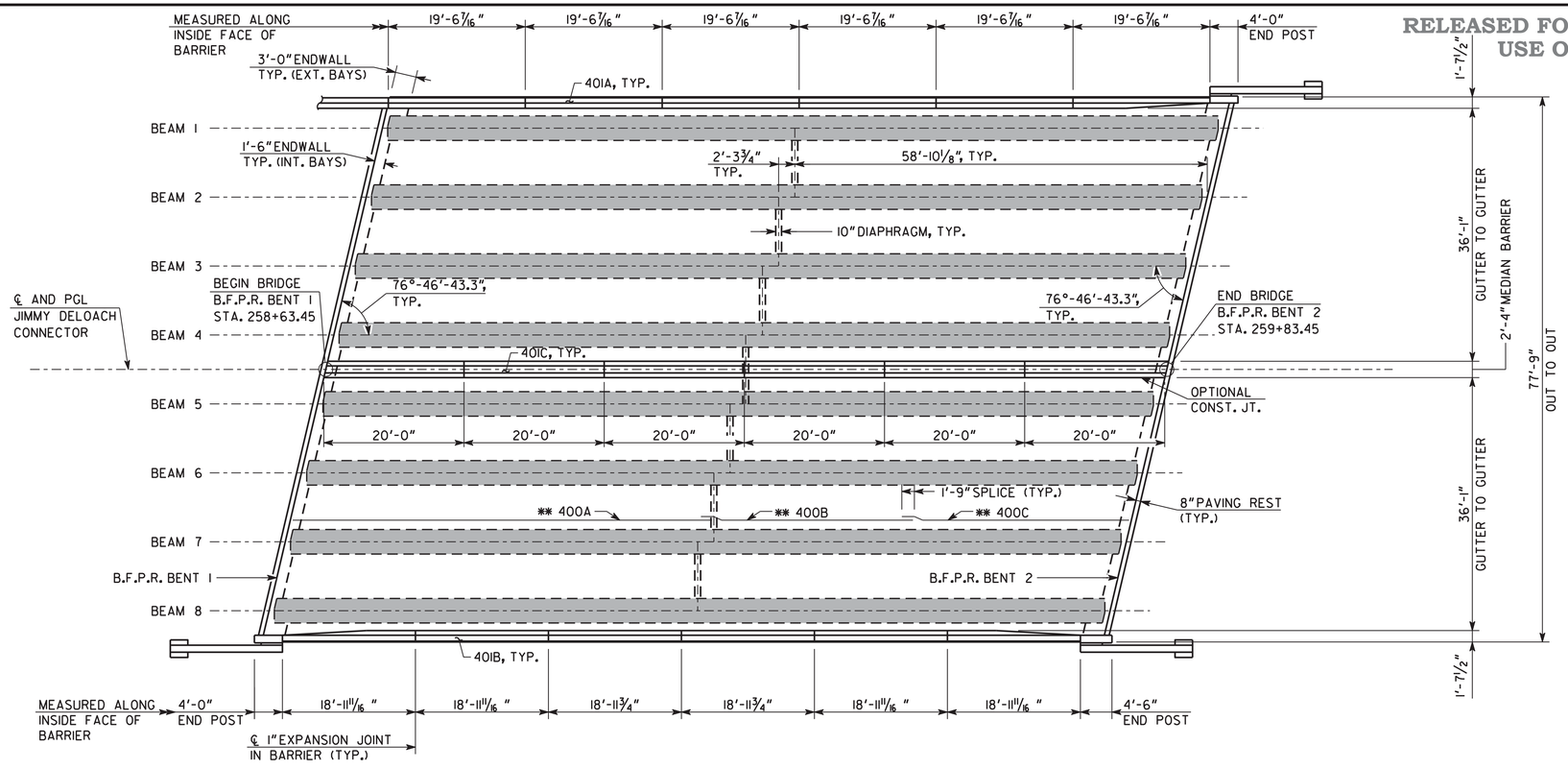

PLAN
SCALE: 1" = 10'-0"

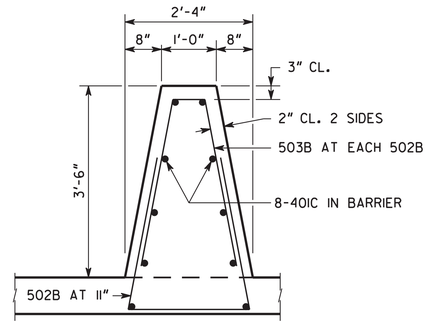

MEDIAN BARRIER DETAIL
NO SCALE

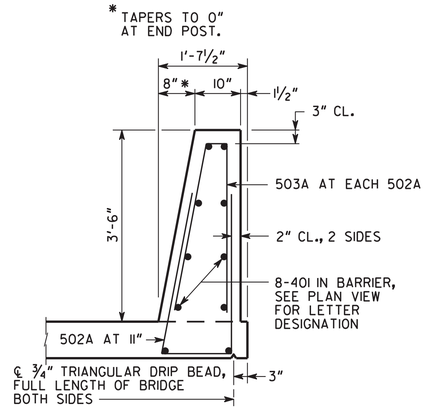

BARRIER DETAIL
NO SCALE

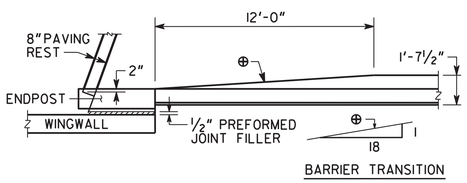

BARRIER TRANSITION DETAIL
NO SCALE

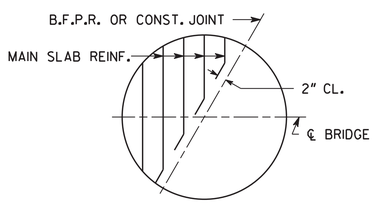

AT B.F.P.R. OR CONST. JOINT

BARS ARE DETAILED IN BAR DETAILS AS EQUIVALENT FULL LENGTH BARS.

BAR BENDING DETAILS AT SKEWED JOINTS
NO SCALE

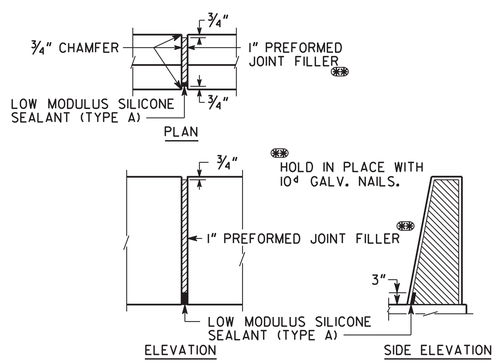

DETAILS OF 1" EXPANSION JOINT IN BARRIER
NO SCALE

SUPERSTRUCTURE QUANTITIES	
ITEM	TOTAL
LUMP - SUPERSTR. CONCRETE, CU YDS., CLASS D	368.2
LUMP - SUPERSTR. REINF. STEEL, LBS. △1 ~~74,465~~	75,187

NOTE: MAINTAIN 2" CLEARANCE ON ALL REINFORCEMENT UNLESS OTHERWISE NOTED.

** ALTERNATE 400A, 400B, AND 400C BARS ACROSS DECK TO STAGGER LAP LOCATION.

BRIDGE NO. 3

THE LPA GROUP
A UNIT OF CORDELL BACON CORPORATION
THE LPA GROUP INCORPORATED
TRANSPORTATION CONSULTANTS
3595 ENGINEERING DRIVE
NORCROSS, GEORGIA 30092
(770) 263-9118

GEORGIA
DEPARTMENT OF TRANSPORTATION
ENGINEERING DIVISION-OFFICE OF BRIDGES AND STRUCTURES

DECK PLAN
JIMMY DELOACH CONNECTOR
OVER NORFOLK SOUTHERN RAILWAY
CHATHAM COUNTY CSMSL-0008-00(690)

REVISIONS	BY	DATE
△1 CORRECTED ENDWALL REINF.	BSB	12/02/2014

DRAWING NO. 35-21
BRIDGE SHEET 3 OF 10

SCALE: AS SHOWN MAY 2013

DESIGNED JCR CHECKED ANZ/AWB REVIEWED DLC/WMD
DRAWN JCR DESIGN GROUP SKG APPROVED BFR

1 INCH WHEN PRINTED FULL SIZE

10/8/2015 2:28:12 PM R:\126379\Bridge\NORFOLK SOUTHERN\final\B0303-DP.dgn