RELEASED FOR CONSTRUCTION: 05/21/2013
USE ON CONSTRUCTION: 10/07/2015

| STATE | PROJECT NUMBER | SHEET NO. | TOTAL SHEETS |
|---|---|---|---|
| GA. | CSMSL-0008-00(690) | 484 | 730 |

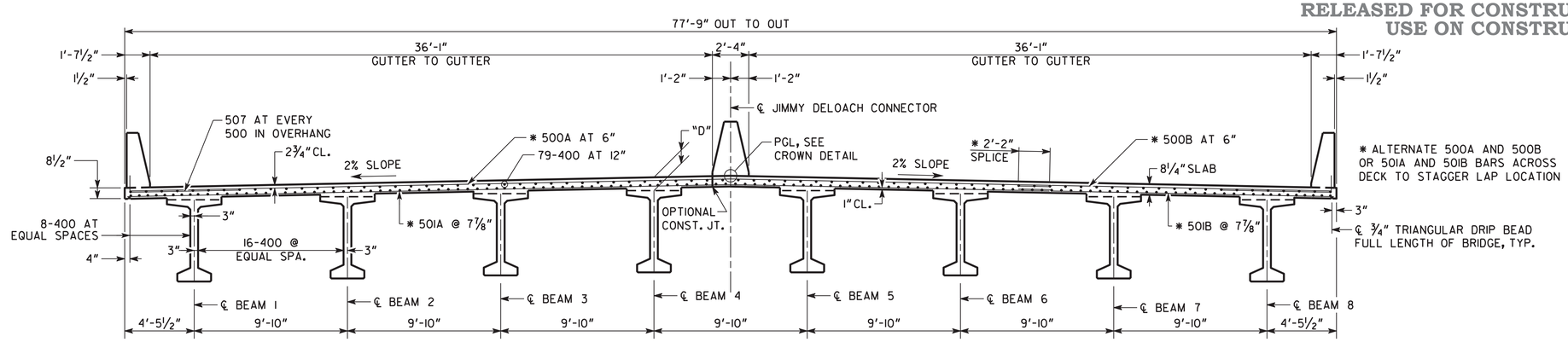


SECTION THRU SLAB

SCALE: ¼" = 1'-0"

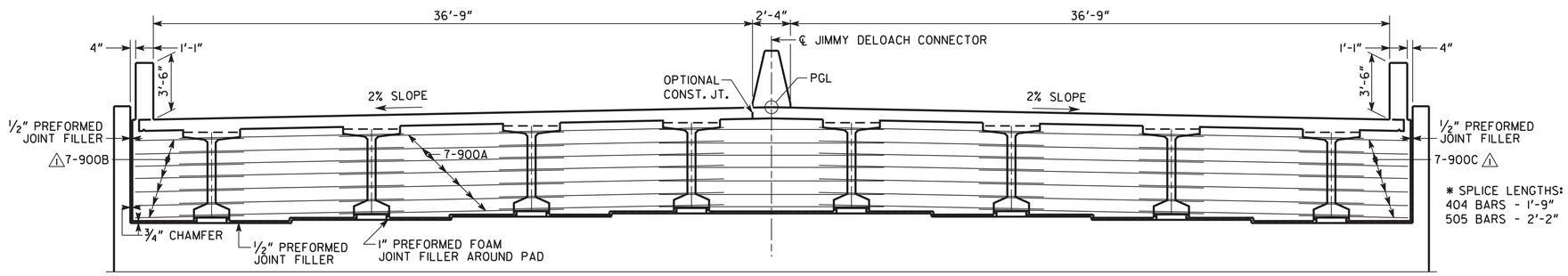


SECTION THRU ENDWALL

SCALE: ¼" = 1'-0"

✱ 404, 504 SERIES, 505, 506 SERIES BARS NOT SHOWN

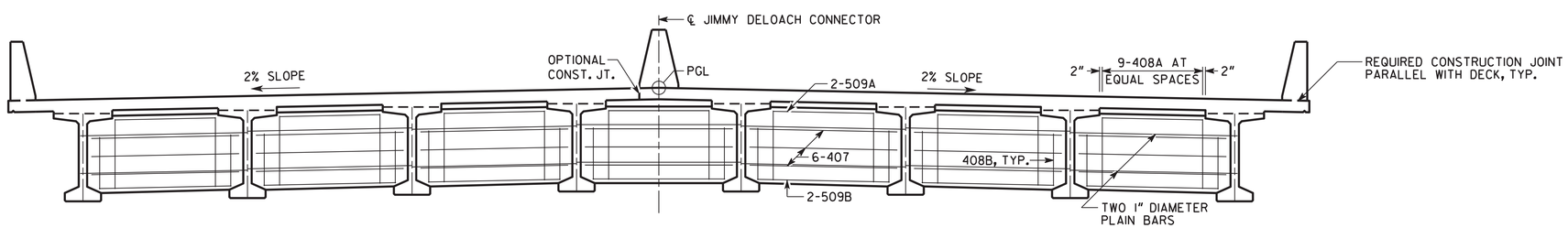


SECTION THRU DIAPHRAGM

SCALE: ¼" = 1'-0"

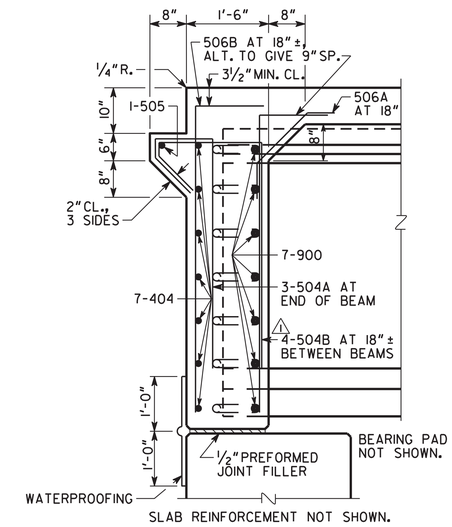


SECTION AT ENDWALL

NO SCALE

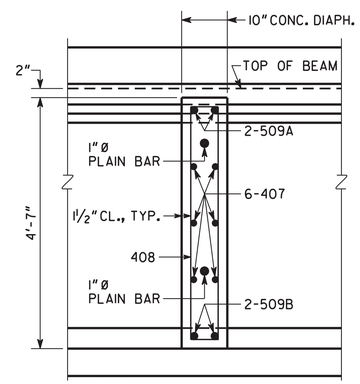


SECTION THRU DIAPHRAGM

NO SCALE

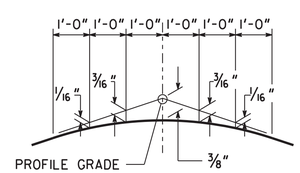


CROWN DETAIL

2% CROSS SLOPE

NO SCALE

NOTES:
1. MAINTAIN 2" CLEARANCE ON ALL REINFORCEMENT UNLESS OTHERWISE NOTED.
2. DIMENSION "D" IS MEASURED FROM TOP OF SLAB TO TOP OF BEAMS AT CENTERLINE BEARING. VARY "D" BETWEEN BEARINGS TO COMPENSATE FOR DEAD LOAD DEFLECTION AND VERTICAL CURVE. MAINTAIN A CONSTANT SLAB THICKNESS OF 8¼" BETWEEN BEAMS AND 8½" AT OVERHANGS. "D" = 10⅞"

BRIDGE NO. 2

THE LPA GROUP — A UNIT OF CARGILL DECKER CORPORATION

THE LPA GROUP INCORPORATED
TRANSPORTATION CONSULTANTS
3595 ENGINEERING DRIVE
NORCROSS, GEORGIA 30092
(770) 263-9118

| BY | REVISIONS | DATE |
|---|---|---|
| BSB | CORRECTED ENDWALL SECT. | 12/02/2014 |

GEORGIA
DEPARTMENT OF TRANSPORTATION
ENGINEERING DIVISION-OFFICE OF BRIDGES AND STRUCTURES

DECK SECTIONS
JIMMY DELOACH CONNECTOR
OVER CROSSGATE ROAD
CHATHAM COUNTY CSMSL-0008-00(690)

DRAWING NO. 35-13
BRIDGE SHEET 4 OF 9

SCALE: AS SHOWN — MAY 2013

DESIGNED BSB — CHECKED ANZ — REVIEWED DLC/WMD
DRAWN BSB — DESIGN GROUP AWB/SKG — APPROVED BFR

1 INCH WHEN PRINTED FULL SIZE

10/8/2015 2:28:05 PM R:\126379\Bridge\CROSSGATE\final\B0204-DS.dgn