STATE	PROJECT NUMBER	SHEET NO.	TOTAL SHEETS
GA.	CSMSL-0008-00(690)	479	730

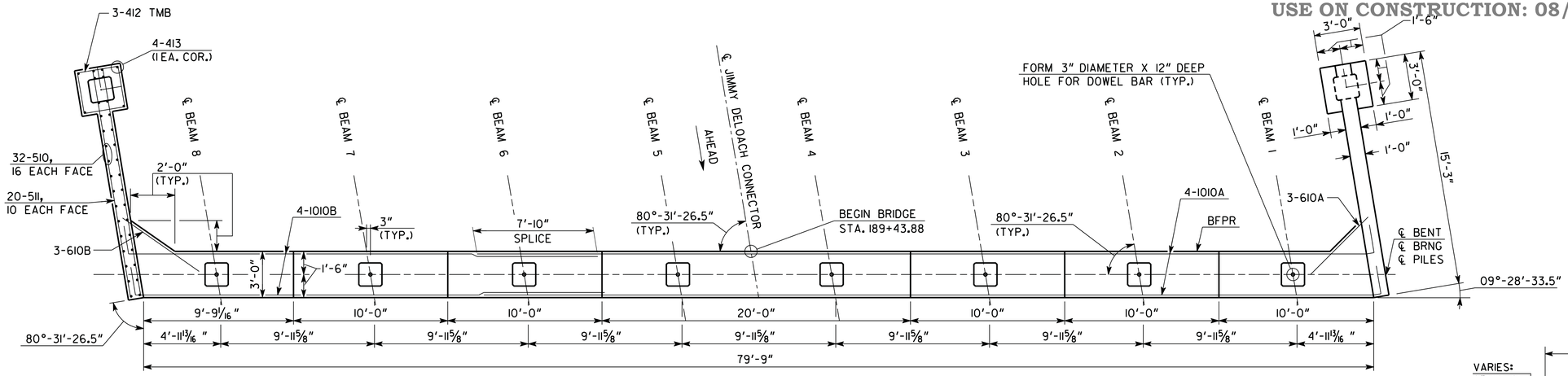

PLAN - BENT 1
SCALE: 1/4" = 1'-0"

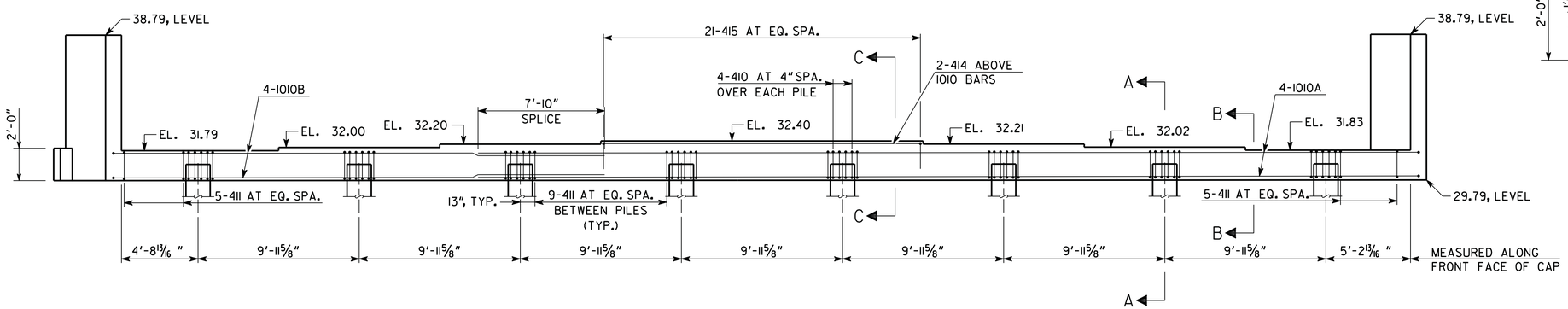

ELEVATION - BENT 1
(LOOKING BACK)
SCALE: 1/4" = 1'-0"

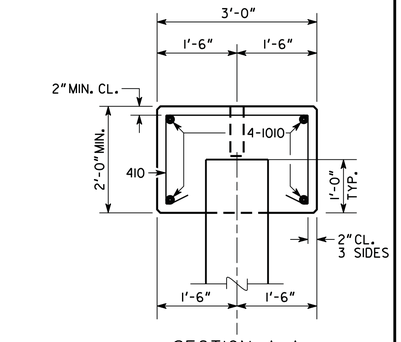

SECTION A-A
SCALE: 3/4" = 1'-0"

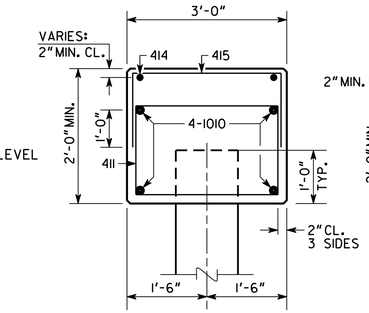

SECTION C-C
SCALE: 3/4" = 1'-0"

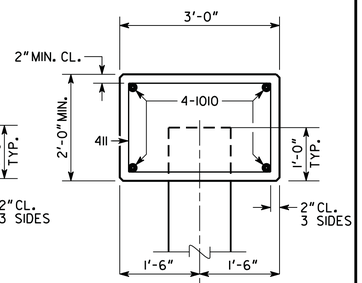

SECTION B-B
SCALE: 3/4" = 1'-0"

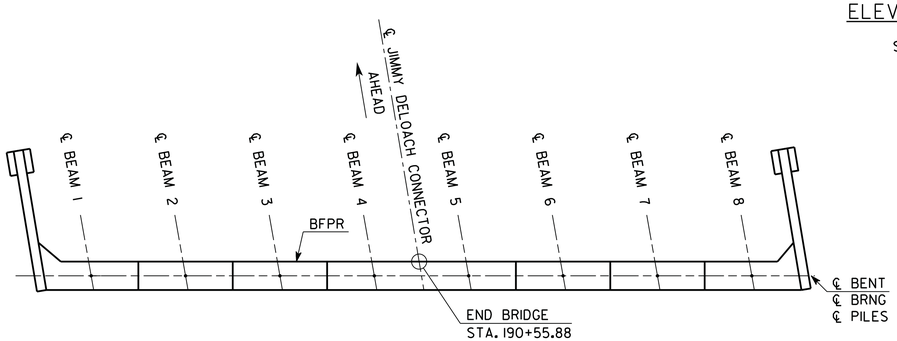

PLAN - BENT 2
SCALE: NONE

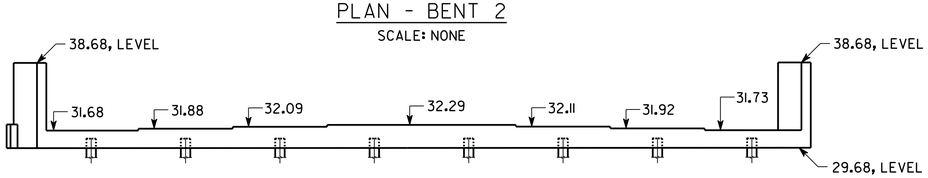

ELEVATION - BENT 2
(LOOKING AHEAD)
SCALE: NONE

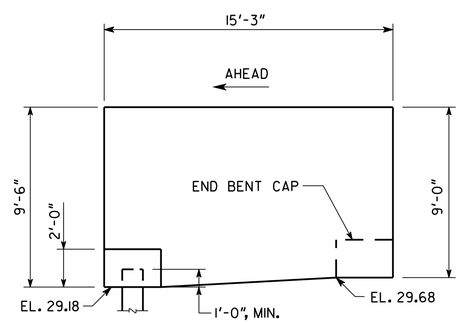

BENT 2 - WINGWALL DETAIL △1
SCALE: NONE
LEFT SIDE WINGWALL

NOTES:

1. MAINTAIN 2" CLEARANCE ON ALL REINFORCEMENT UNLESS OTHERWISE NOTED.
2. POUR WINGWALLS MONOLITHICALLY WITH THE CAP.
3. SEE GEORGIA STANDARD 9037 FOR DRAINAGE DETAILS AT END BENT.
4. WINGWALL PILES NOT SHOWN IN ELEVATION.
5. △1 BOTTOM OF BENT 2, LEFT WINGWALL IS SLOPED, SEE DETAIL. BOTTOM OF ALL OTHER WINGWALLS ARE LEVEL.

SUBSTRUCTURE QUANTITIES

ITEM	BENT 1	BENT 2
CY CLASS "A" CONCRETE	31.1	~~31.1~~ 31.2 △1
LB BAR REINF STEEL	3,713	3,713

PLAN DRIVING OBJECTIVE

ALL PILES SHALL BE DRIVEN TO A DRIVING RESISTANCE OF 454 TONS AT BENT 1 AND 363 TONS AT BENT 2 AFTER MINIMUM TIP ELEVATIONS ARE ACHEIVED AS FOLLOWS:
BENT 1 _____ ELEV. -20.00
BENT 2 _____ ELEV. -5.00

ALL PILES SHALL BE 18" SQ. PSC

BRIDGE NO. 1

THE LPA GROUP
A UNIT OF MICHAEL BAKER CORPORATION
THE LPA GROUP INCORPORATED
TRANSPORTATION CONSULTANTS
3595 ENGINEERING DRIVE
NORCROSS, GEORGIA 30092
(770) 263-9118

REVISIONS		BY	DATE
△1	ADDITIONAL WINGWALL HT.	BSB	08/01/2014

GEORGIA
DEPARTMENT OF TRANSPORTATION
ENGINEERING DIVISION-OFFICE OF BRIDGES AND STRUCTURES

END BENT 1 DETAILS
JIMMY DELOACH CONNECTOR
OVER GRANGE ROAD
CHATHAM COUNTY CSMSL-0008-00(690)

DRAWING NO. 35-07
BRIDGE SHEET 7 OF 9

SCALE: AS SHOWN MAY 2013

DESIGNED BSB | CHECKED ANZ | REVIEWED DLC/WMD
DRAWN BSB | DESIGN GROUP AWB/SKG | APPROVED BFR

1 INCH WHEN PRINTED FULL SIZE