VOID

RELEASED FOR CONSTRUCTION: 05/21/2013

STATE	PROJECT NUMBER	SHEET NO.	TOTAL SHEETS
GA.	CSMSL-0008-00(690)	475	730

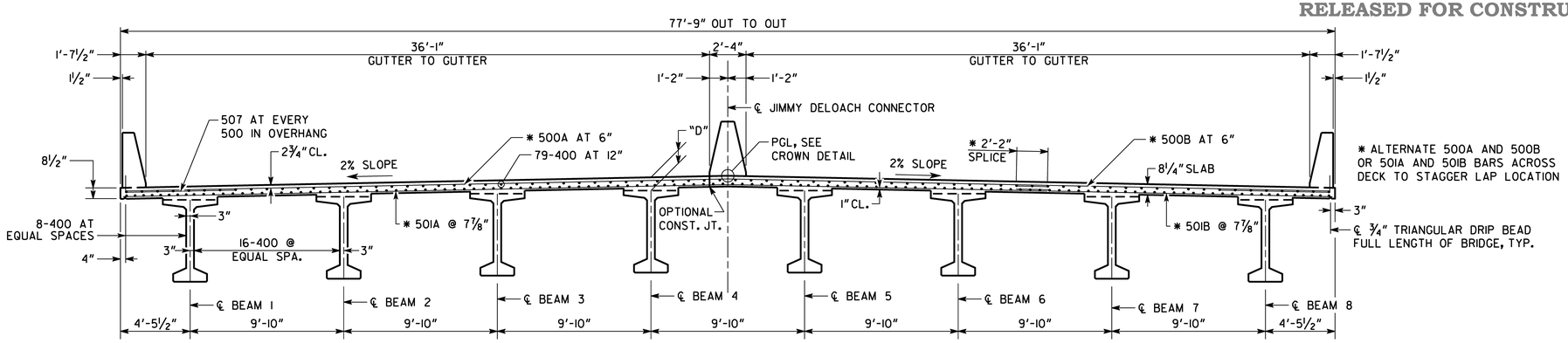

SECTION THRU SLAB

SCALE: ¼" = 1'-0"

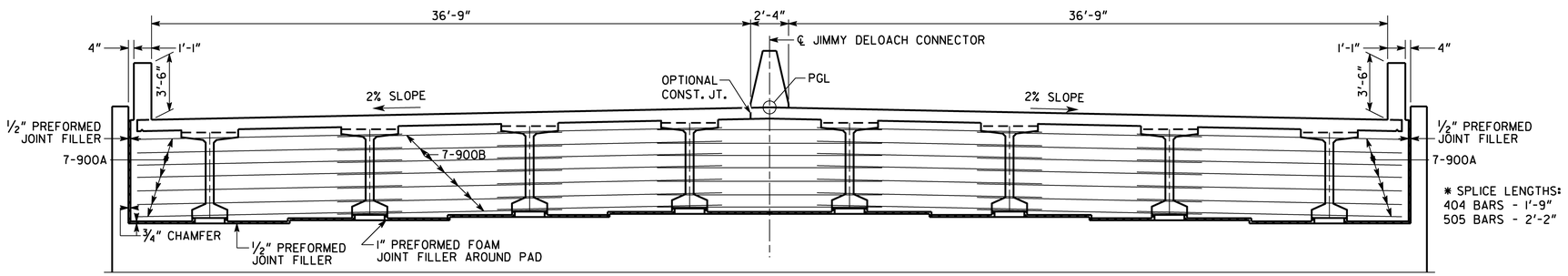

SECTION THRU ENDWALL

SCALE: ¼" = 1'-0"

✱ 404, 504 SERIES, 505, 506 SERIES BARS NOT SHOWN

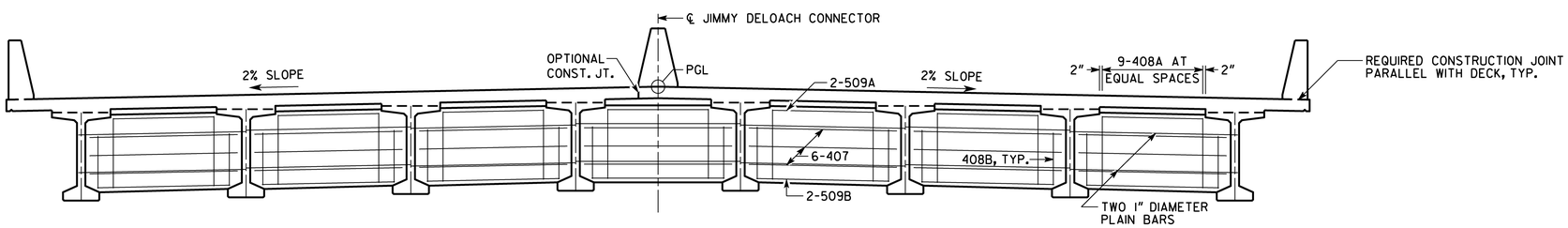

SECTION THRU DIAPHRAGM

SCALE: ¼" = 1'-0"

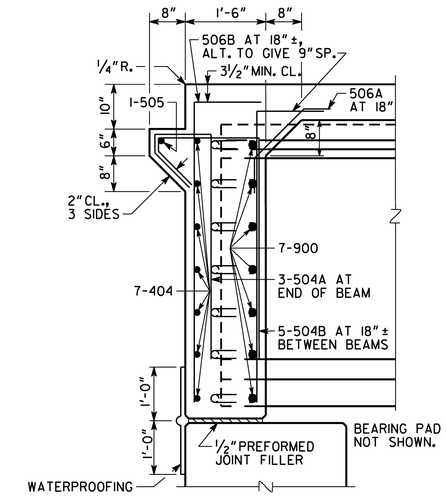

SECTION AT ENDWALL

NO SCALE

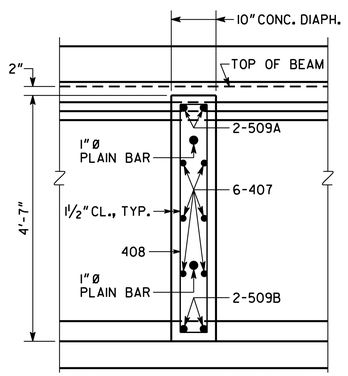

SECTION THRU DIAPHRAGM

NO SCALE

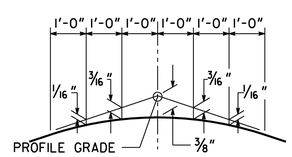

CROWN DETAIL

2% CROSS SLOPE
NO SCALE

NOTES:
1. MAINTAIN 2" CLEARANCE ON ALL REINFORCEMENT UNLESS OTHERWISE NOTED.
2. DIMENSION "D" IS MEASURED FROM TOP OF SLAB TO TOP OF BEAMS AT CENTERLINE BEARING. VARY "D" BETWEEN BEARINGS TO COMPENSATE FOR DEAD LOAD DEFLECTION AND VERTICAL CURVE. MAINTAIN A CONSTANT SLAB THICKNESS OF 8¼" BETWEEN BEAMS AND 8½" AT OVERHANGS. "D" = 10⅞"

BRIDGE NO. 1

THE LPA GROUP — A UNIT OF CONSULTING ENGINEERS CORPORATION
THE LPA GROUP INCORPORATED
TRANSPORTATION CONSULTANTS
3595 ENGINEERING DRIVE
NORCROSS, GEORGIA 30092
(770) 263-9118

GEORGIA
DEPARTMENT OF TRANSPORTATION
ENGINEERING DIVISION-OFFICE OF BRIDGES AND STRUCTURES

DATE | REVISIONS | BY

DRAWING NO. 35-04
BRIDGE SHEET 4 OF 9

DECK SECTIONS
JIMMY DELOACH CONNECTOR
OVER GRANGE ROAD
CHATHAM COUNTY CSMSL-0008-00(690)

SCALE: AS SHOWN JULY 2013

DESIGNED BSB | CHECKED ANZ | REVIEWED DLC/WMD
DRAWN BSB | DESIGN GROUP AWB/SKG | APPROVED BFR

1 INCH WHEN PRINTED FULL SIZE

8/6/2013 1:38:43 PM R:\126379\Bridge\GRANGE\final\B0104-DS.dgn