RELEASED FOR CONSTRUCTION: 05/21/2013
USE ON CONSTRUCTION: 10/07/2015

STATE	PROJECT NUMBER	SHEET NO.	TOTAL SHEETS
GA.	CSMSL-0008-00(690)	474	730

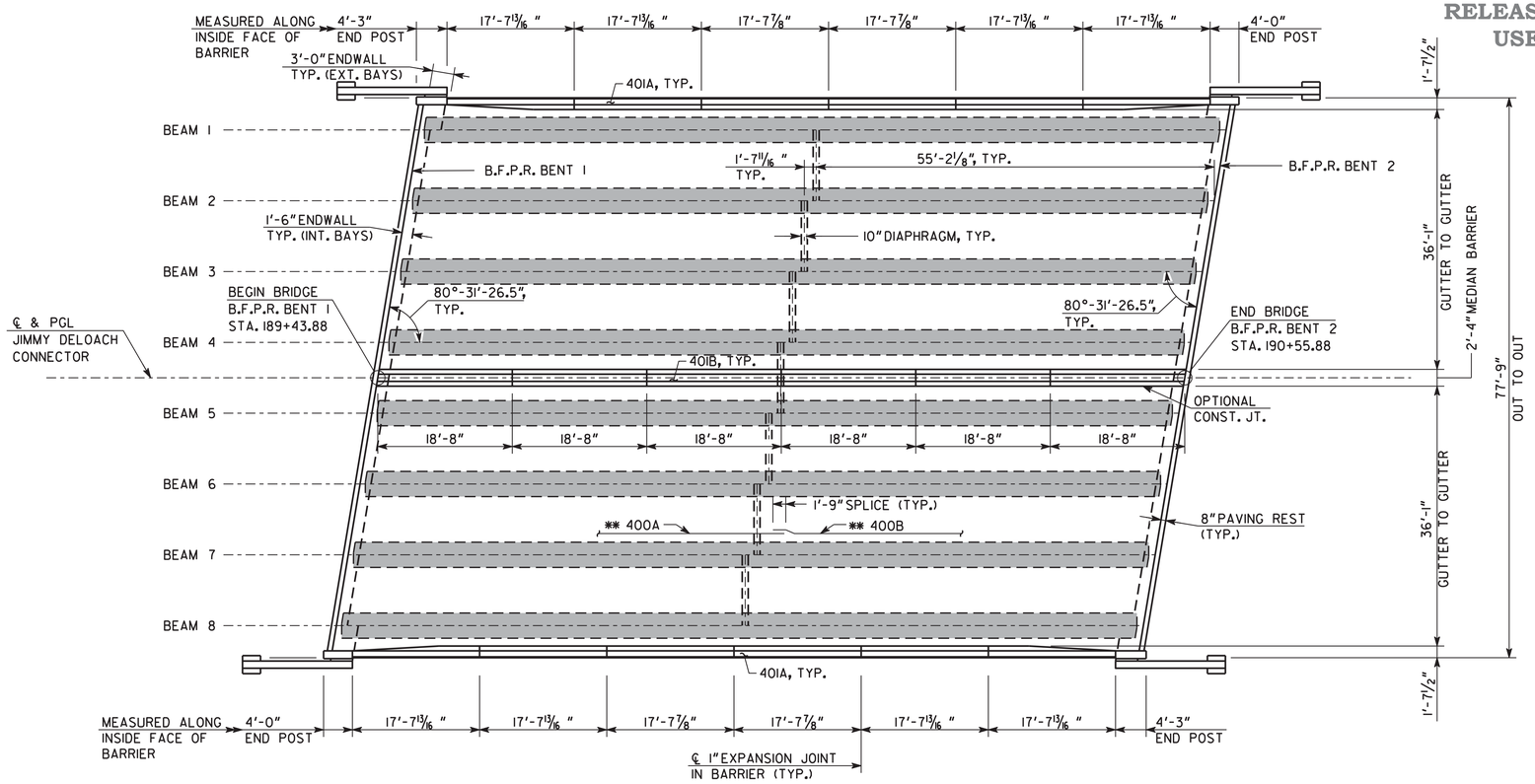

PLAN
SCALE: 1" = 10'-0"

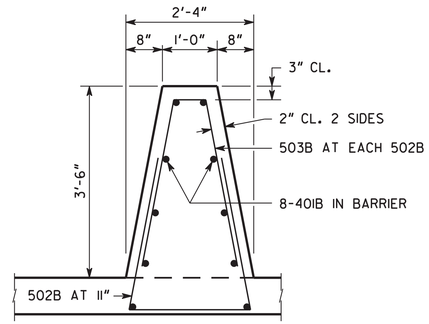

MEDIAN BARRIER DETAIL
NO SCALE

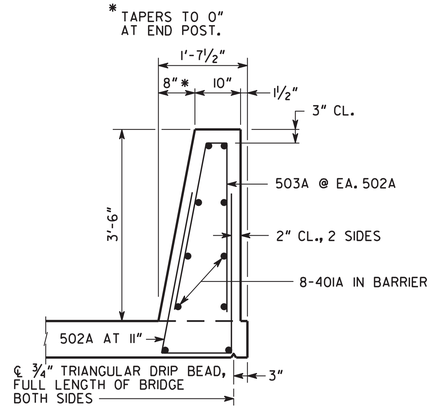

BARRIER DETAIL
NO SCALE

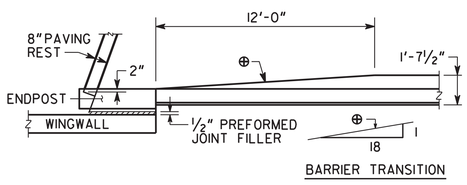

BARRIER TRANSITION DETAIL
NO SCALE

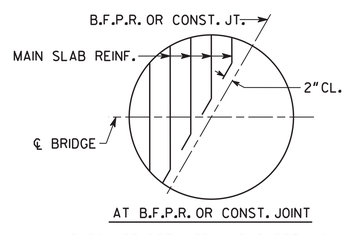

BARS ARE DETAILED IN BAR DETAILS AS EQUIVALENT FULL LENGTH BARS.

BAR BENDING DETAILS AT SKEWED JOINTS
NO SCALE

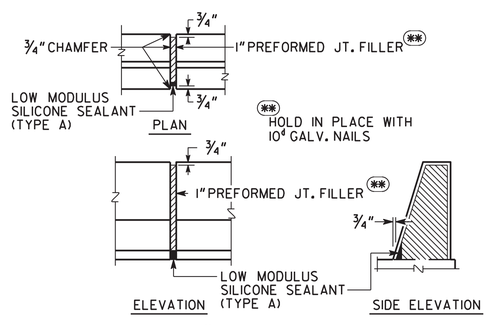

DETAILS OF 1" EXPANSION JOINT IN BARRIER
NO SCALE

SUPERSTRUCTURE QUANTITIES	
ITEM	TOTAL
LUMP - SUPERSTR. CONCRETE, CU YDS., CLASS D	342.8
LUMP - SUPERSTR. REINF. STEEL, LBS. △1	~~70,459~~ 71,023

NOTE: MAINTAIN 2" CLEARANCE ON ALL REINFORCEMENT UNLESS OTHERWISE NOTED.

** ALTERNATE 400A AND 400B BARS ACROSS DECK TO STAGGER LAP LOCATION.

REVISIONS	BY	DATE
△1 ENDWALL REINF. CORRECTED	BSB	11/26/2014

BRIDGE NO. 1

THE LPA GROUP
A UNIT OF GENERAL DATA CORPORATION
THE LPA GROUP INCORPORATED
TRANSPORTATION CONSULTANTS
3595 ENGINEERING DRIVE
NORCROSS, GEORGIA 30092
(770) 263-9118

GEORGIA
DEPARTMENT OF TRANSPORTATION
ENGINEERING DIVISION-OFFICE OF BRIDGES AND STRUCTURES

DECK PLAN
JIMMY DELOACH CONNECTOR
OVER GRANGE ROAD
CHATHAM COUNTY CSMSL-0008-00(690)

DRAWING NO. 35-03
BRIDGE SHEET 3 OF 9

SCALE: AS SHOWN MAY 2013

DESIGNED BSB | CHECKED ANZ | REVIEWED DLC/WMD
DRAWN BSB | DESIGN GROUP AWB/SKG | APPROVED BFR

1 INCH WHEN PRINTED FULL SIZE

10/8/2015 2:27:54 PM R:\126379\Bridge\GRANGE\final\B0103-DP.dgn