RELEASED FOR CONSTRUCTION - 07-23-13

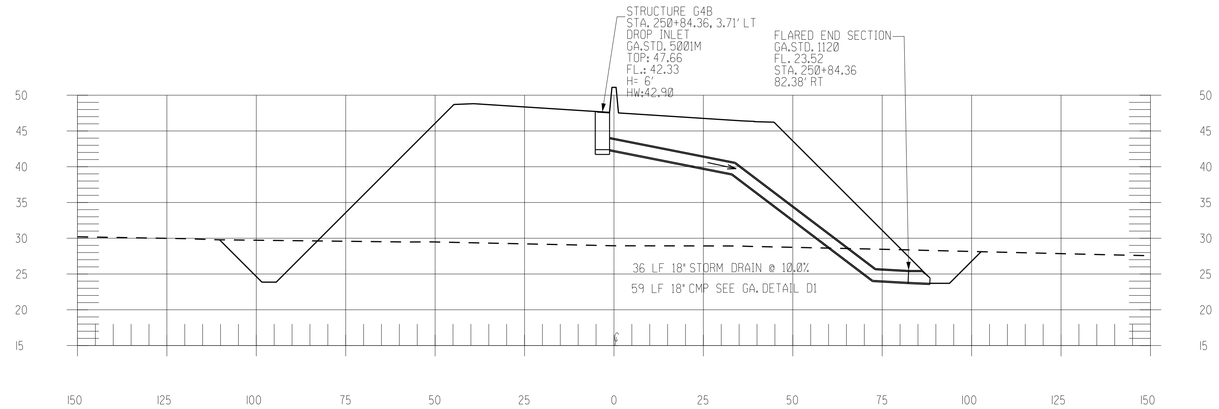


250+84.36

G4B

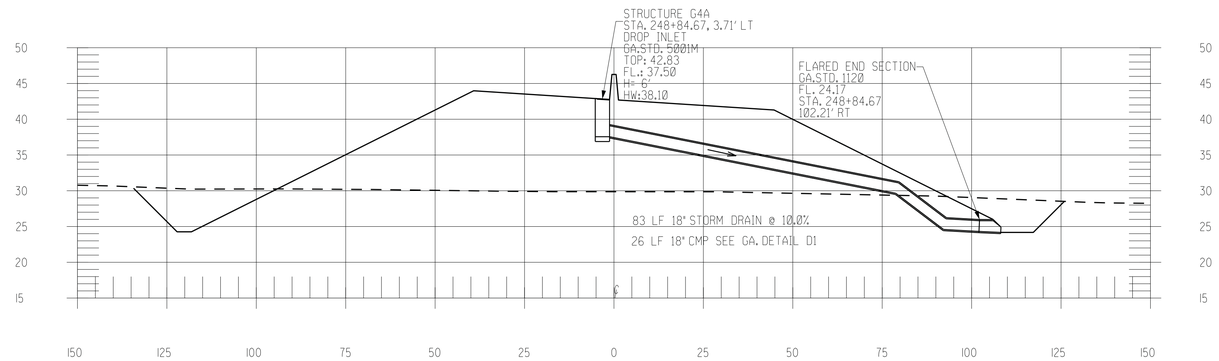


248+84.67

G4A

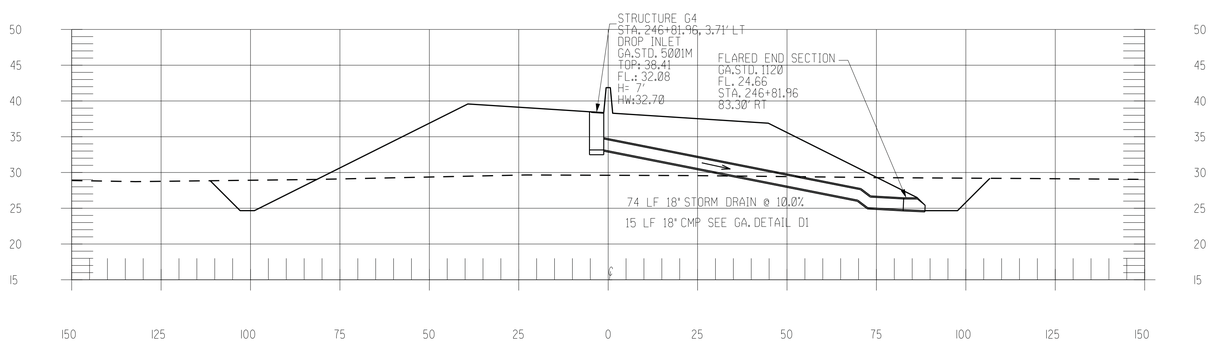


246+81.96

G4

| REVISION DATES | | |
|---|---|---|
| | | |

STATE OF GEORGIA
DEPARTMENT OF TRANSPORTATION

OFFICE: INNOVATIVE PROGRAM DELIVERY

## DRAINAGE PROFILES

DRAWING No. 22-007