VOID

RELEASED FOR CONSTRUCTION - 07-23-13

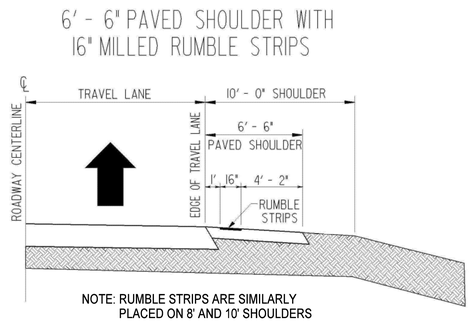

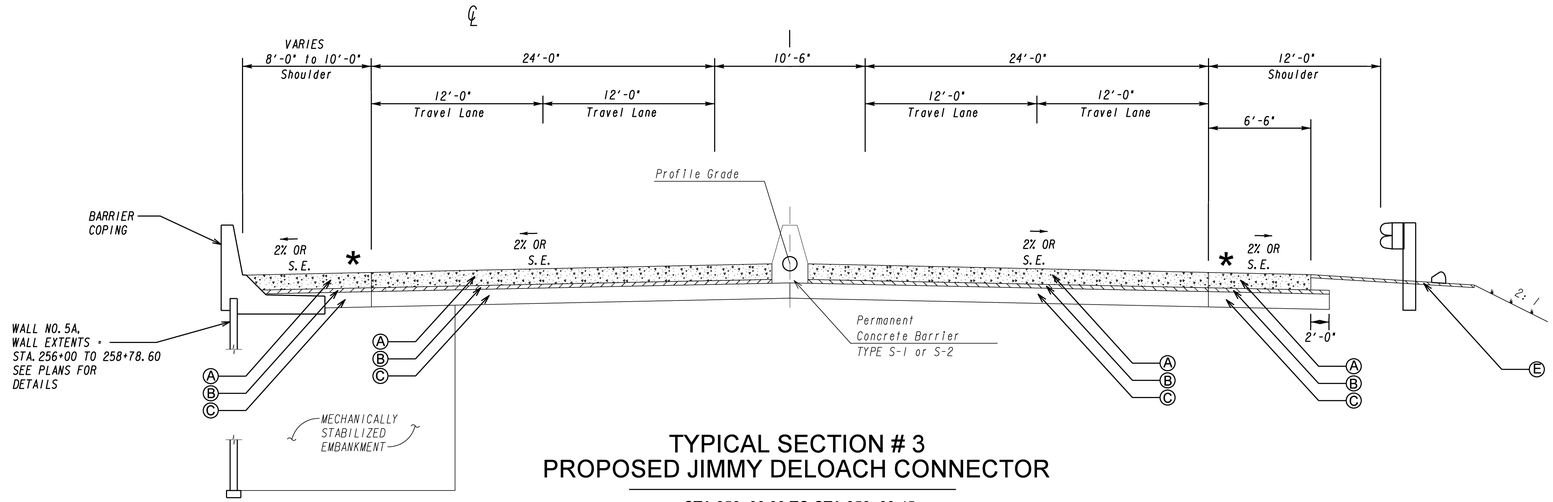

TYPICAL SECTION # 3
PROPOSED JIMMY DELOACH CONNECTOR

STA 256+00.00 TO STA 258+63.45
NOTE: TRANSVERSE JOINTS AT 20' INTERVALS

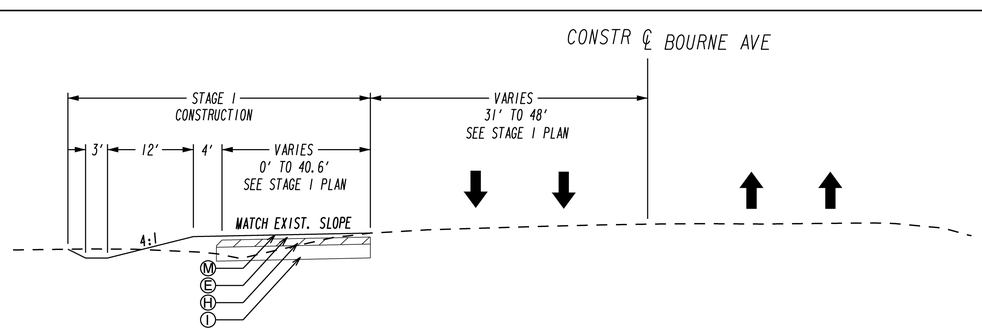

TEMPORARY STAGE CONSTRUCTION PAVEMENT ALONG BOURNE AVENUE

STA.1012+31.7 TO STA.1040+04.7

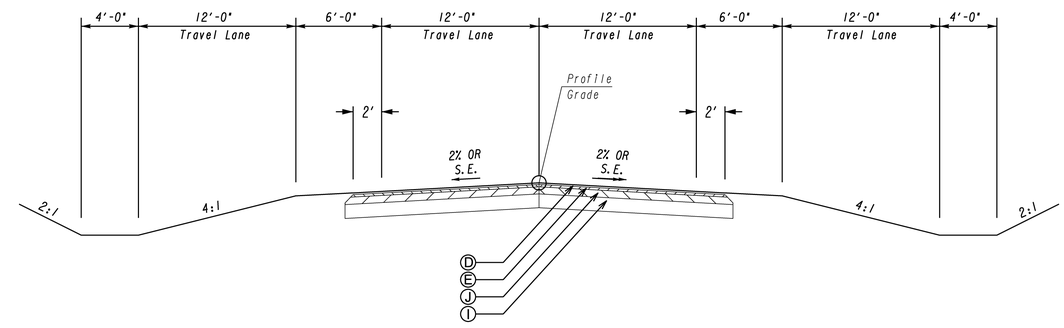

TYPICAL SECTION #16
BOURNE AVENUE LOCAL ACCESS

REQUIRED PAVEMENT

- Ⓐ PLAIN PORTLAND CEMENT CONCRETE PVMT, CL 1 CONC, 12 INCH THK
- Ⓑ RECYCLED ASPH CONC 19 MM SUPERPAVE, GP 1 OR 2, INCL BITUM MATL & H LIME (330 LBS/SY)
- Ⓒ GR AGGR BASE CRS, 12 " INCL MATL
- Ⓓ RECYCLED ASPH CONC 12.5 MM, SUPERPAVE, GP 2 ONLY, INCL POLYMER-MODIFIED BITUM MATL & H LIME (165 LBS/SY)
- Ⓔ RECYCLED ASPH CONC 19 MM SUPERPAVE, GP 1 OR 2, INCL BITUM MATL & H LIME (220 LBS/SY)
- Ⓕ RECYCLED ASPH CONC 25 MM SUPERPAVE, GP 1 OR 2, INCL BITUM MATL & H LIME (660 LBS/SY)
- Ⓖ 6" CONCRETE DOWELED INTEGRAL MEDIAN, CURB FACE TYPE 7
- Ⓗ RECYCLED ASPH CONC 25 MM SUPERPAVE, GP 1 OR 2, INCL BITUM MATL & H LIME (440 LBS/SY)
- Ⓘ GR AGGR BASE CRS, 8 " INCL MATL
- Ⓙ RECYCLED ASPH CONC 25 MM SUPERPAVE, GP 1 OR 2, INCL BITUM MATL & H LIME (330 LBS/SY)
- Ⓚ GR AGGR BASE CRS, 6 " INCL MATL
- Ⓛ RECYCLED ASPH CONC LEVELING, AS REQUIRED
- Ⓜ RECYCLED ASPH CONC 12.5MM SUPERPAVE, GP 1 OR 2, INCL BITUM MATL (165 LBS/SY)

NOTE ① SEE ROADWAY PLANS FOR SUPERELEVATION RATES & TRANSITIONS.
✱ 16" MILLED SKIP RUMBLE STRIPS, GA STD DETAIL S-9

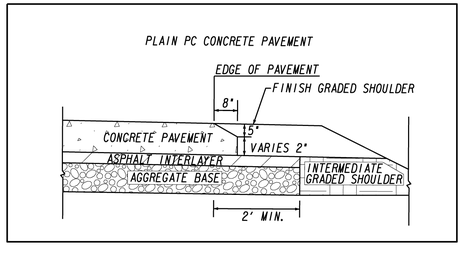

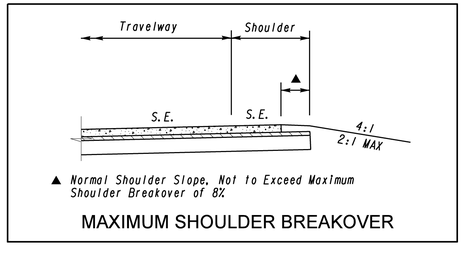

MAXIMUM SHOULDER BREAKOVER

THE LPA GROUP
TRANSPORTATION CONSULTANTS
A UNIT OF MICHAEL BAKER CORPORATION
3595 ENGINEERING DRIVE
NORCROSS, GEORGIA 30092
(770) 263-9118

REVISION DATES

STATE OF GEORGIA
DEPARTMENT OF TRANSPORTATION
OFFICE: INNOVATIVE PROGRAM DELIVERY
TYPICAL SECTIONS

DRAWING No. 5-002

1/5/2009 GPLN