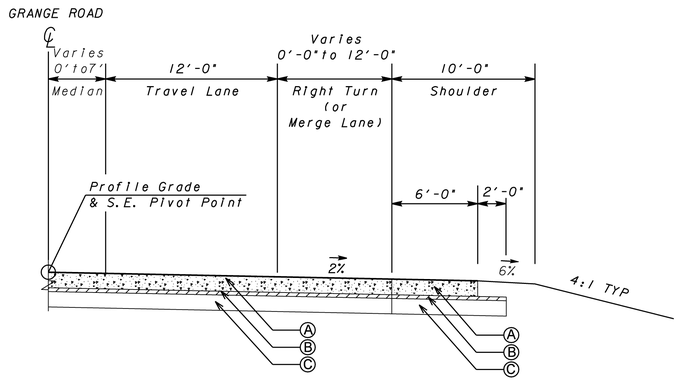

RIGHT TURN LANE (OR MERGE LANE) DETAIL ON GRANGE ROAD

SEE PLANS FOR LOCATIONS

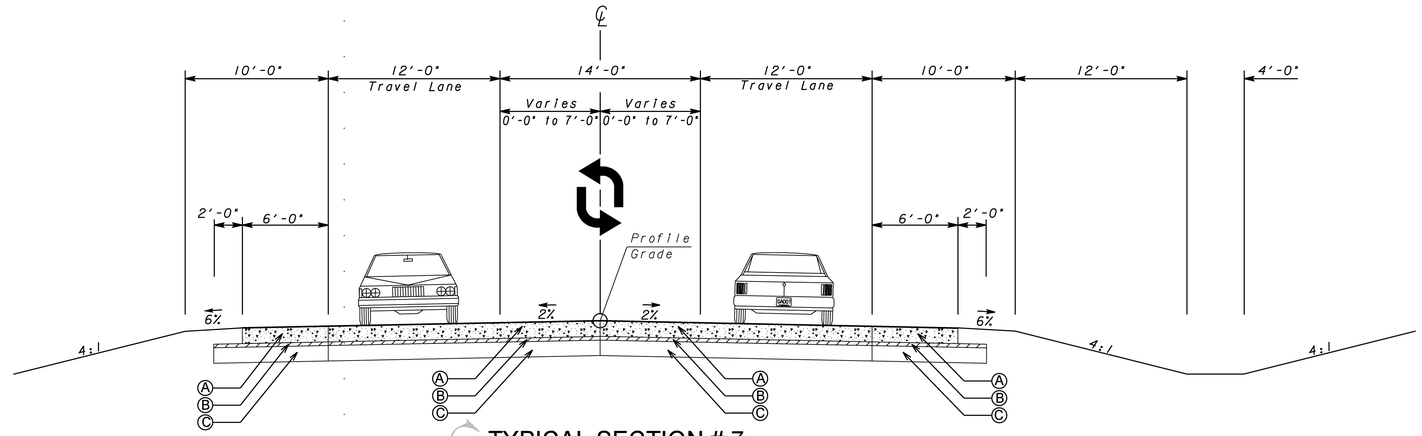

TYPICAL SECTION # 7 GRANGE ROAD

STA 2014+50.00 TO STA 2029+04.07

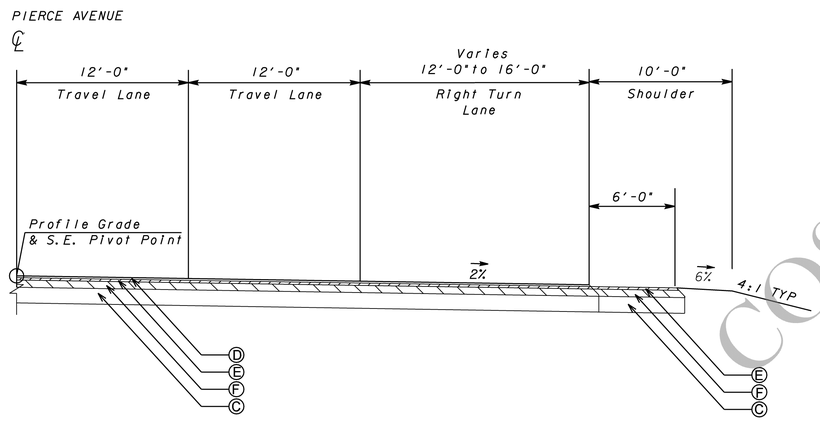

3 LANES SECTION ON PIERCE AVENUE

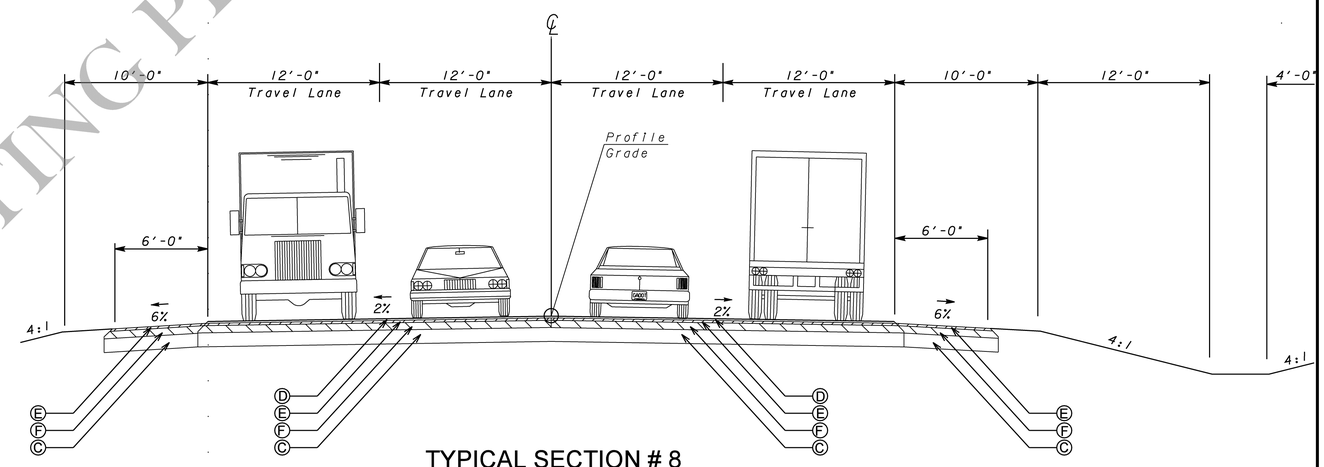

TYPICAL SECTION # 8 PIERCE AVENUE

STA 7000+58.23 TO STA 7015+70.00

REQUIRED PAVEMENT

- (D) RECYCLED ASPH CONC 12.5 MM, SUPERPAVE, GP 2 ONLY, INCL POLYMER-MODIFIED BITUM MATL & H LIME (165 LBS/SY)
- (E) RECYCLED ASPH CONC 19 MM SUPERPAVE, GP 1 OR 2, INCL BITUM MATL (220 LBS/SY)
- (F) RECYCLED ASPH CONC 25 MM SUPERPAVE, GP 1 OR 2, INCL BITUM MATL & H LIME (660 LBS/SY)
- (C) GR AGGR BASE CRS, 12 " INCL MATL

NOTE

(1) SEE ROADWAY PLANS FOR SUPERELEVATION RATES & TRANSITIONS.

COSTING PLANS