RELEASED FOR CONSTRUCTION 10-05-2010

STATE	PROJECT NUMBER	SHEET NO.	TOTAL SHEETS
GA.	CSSTP-0008-00(651)	250	346

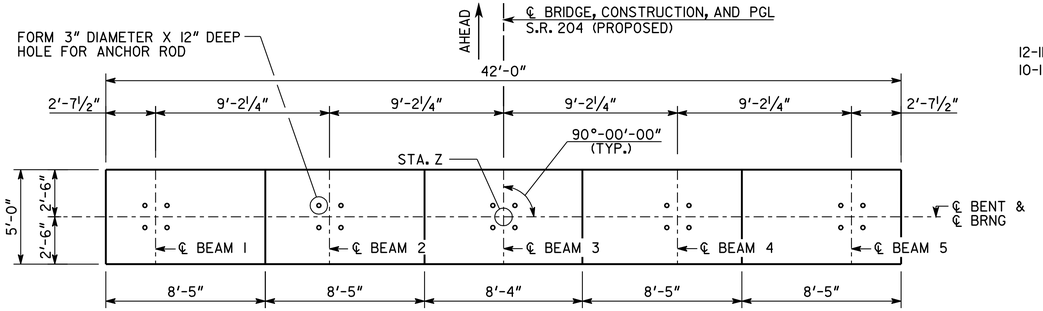

PLAN

SCALE: ¼" = 1'-0"

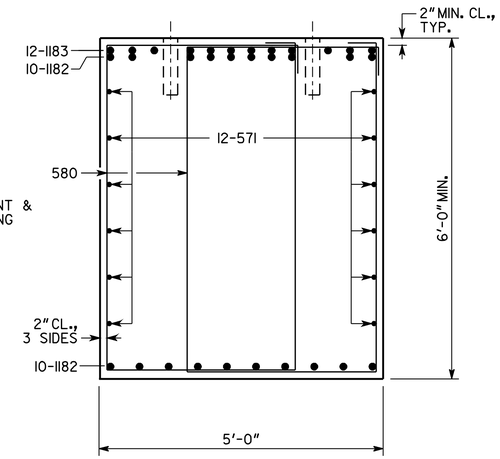

SECTION A-A

SCALE: ¾" = 1'-0"

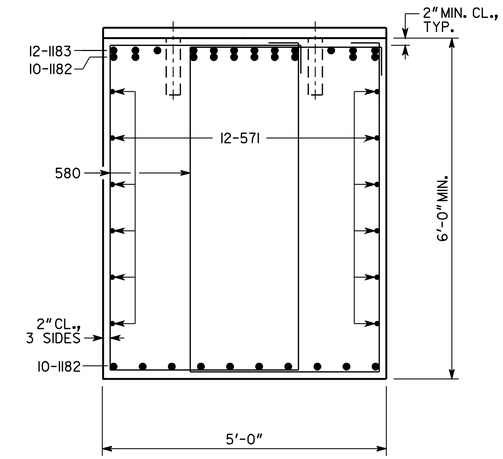

SECTION B-B

SCALE: ¾" = 1'-0"

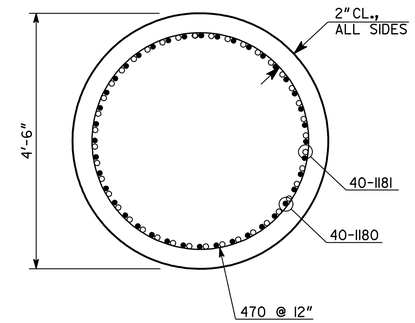

SECTION C-C

SCALE: ¾" = 1'-0"

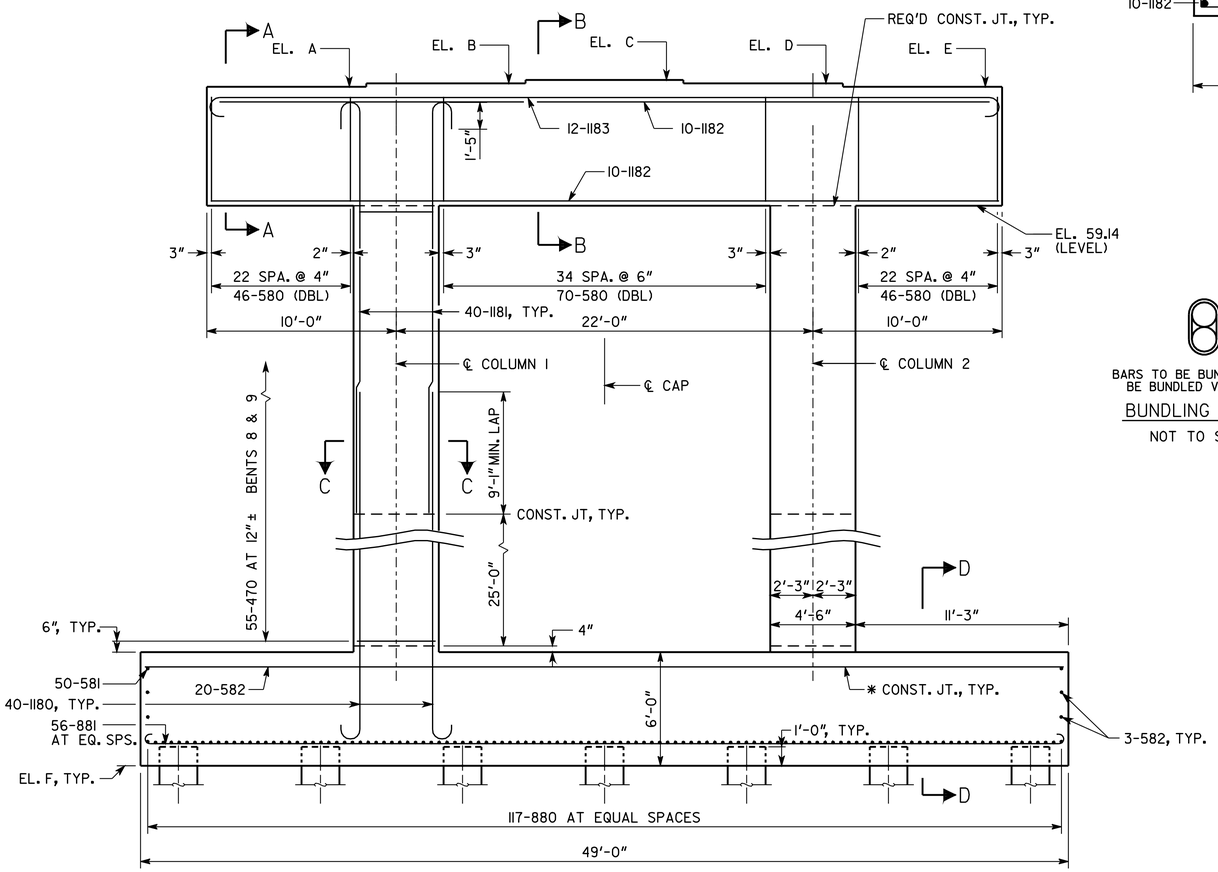

ELEVATION

(LOOKING AHEAD)

SCALE: ¼" = 1'-0"

* AT CONTRACTOR'S OPTION CONSTRUCTION JOINT MAY BE RELOCATED TO TOP OF FOOTING

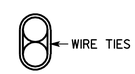

BARS TO BE BUNDLED SHALL BE BUNDLED VERTICALLY

BUNDLING DETAIL

NOT TO SCALE

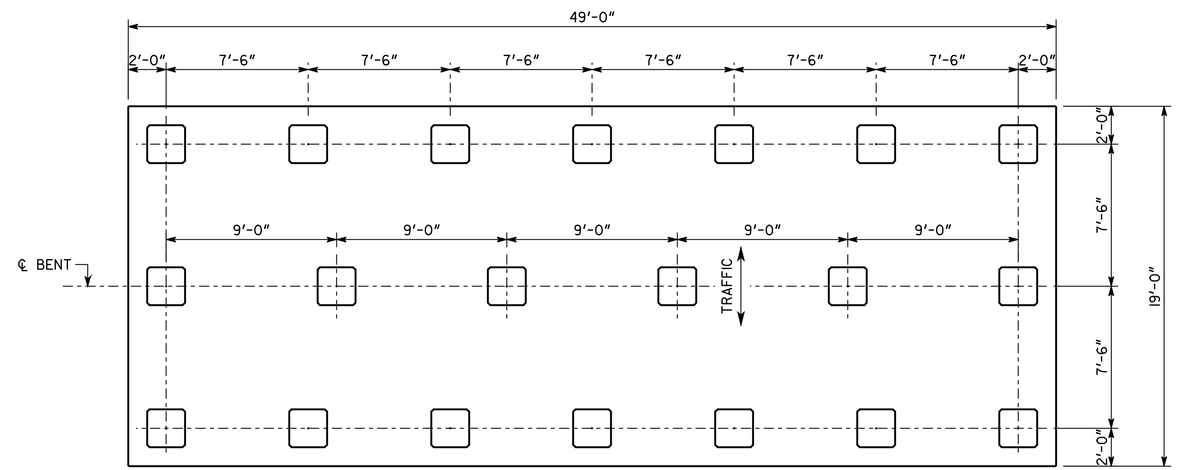

PILE LAYOUT

SCALE: ¼" = 1'-0"

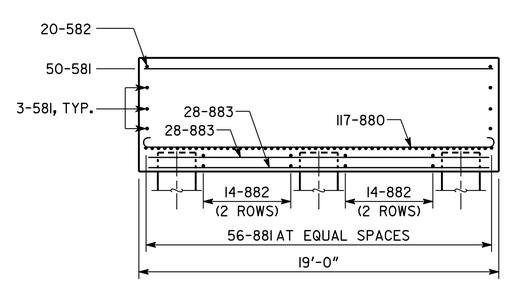

SECTION D-D

PLAN DRIVING OBJECTIVE

ALL PILES SHALL BE 24 IN SQ PSC

ALL PILES SHALL BE DRIVEN TO A DRIVING RESISTANCE OF 170 TONS AFTER A MINIMUM TIP ELEVATION OF -45.00' OR -50.00' IS ACHIEVED AT BENT 8 OR 9, RESPECTIVELY.

BRIDGE NO. 1

NOTE: MAINTAIN 2" CL. ON ALL REINFORCEMENT UNLESS OTHERWISE NOTED

NOTE: BENT CAP IS SYMMETRICAL ABOUT ℄ CAP

TABLE OF ELEVATIONS

	STA. Z	A	B	C	D	E	F
BENT 8	302+14.00	65.14	65.32	65.47	65.32	65.14	-1.07
BENT 9	304+64.00	65.14	65.32	65.47	65.32	65.14	-1.07

SUBSTRUCTURE QUANTITIES

ITEM	BENT 8	BENT 9
CY CLASS AA CONCRETE	318.50	318.50
LB BAR REINF STEEL	76,530	76,530

THE LPA GROUP

THE LPA GROUP INCORPORATED
TRANSPORTATION CONSULTANTS
3595 ENGINEERING DRIVE
NORCROSS, GEORGIA 30092
(770) 263-9118

GEORGIA

DEPARTMENT OF TRANSPORTATION

PRECONSTRUCTION DIVISION-OFFICE OF BRIDGE DESIGN

REVISIONS | DATE | BY

INTERMEDIATE BENT 8 & 9 DETAILS
SR 204 SPUR (DIAMOND CAUSEWAY)
OVER SKIDAWAY NARROWS
CHATHAM COUNTY CSSTP-0008-00(651)

SCALE: AS SHOWN OCTOBER 2010

DRAWING NO. 35-37

BRIDGE SHEET 37 OF 48

DESIGNED EKB | CHECKED RFD | REVIEWED WMD / WEI

DRAWN JNA / MDM | DESIGN GROUP DGH | APPROVED PVL