RELEASED FOR CONSTRUCTION 10-05-2010

STATE	PROJECT NUMBER	SHEET NO.	TOTAL SHEETS
GA.	CSSTP-0008-00(651)	248	346

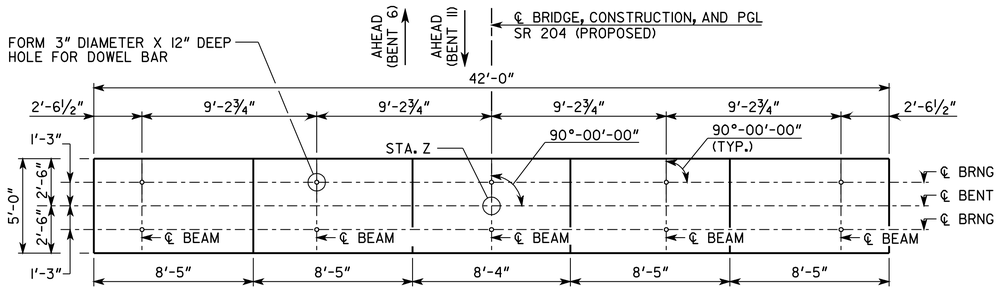

PLAN
BENT 6 SHOWN, BENT 11 SIMILAR
SCALE: 1/4" = 1'-0"

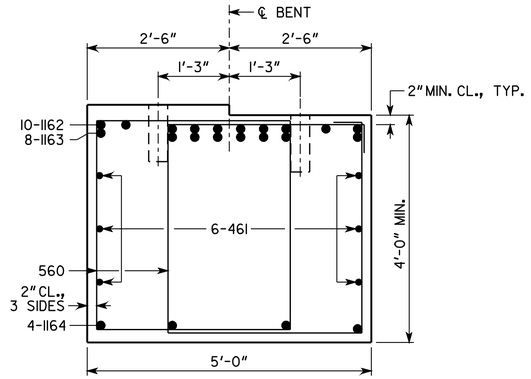

SECTION A-A
SCALE: 3/4" = 1'-0"

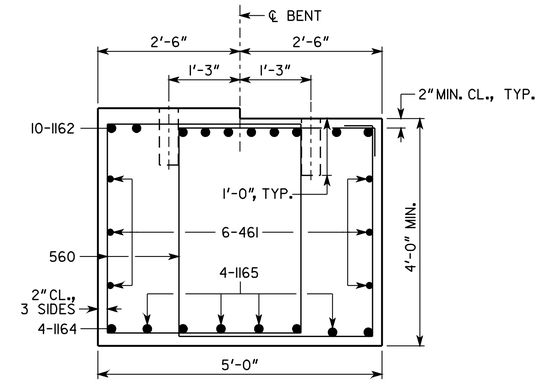

SECTION B-B
SCALE: 3/4" = 1'-0"

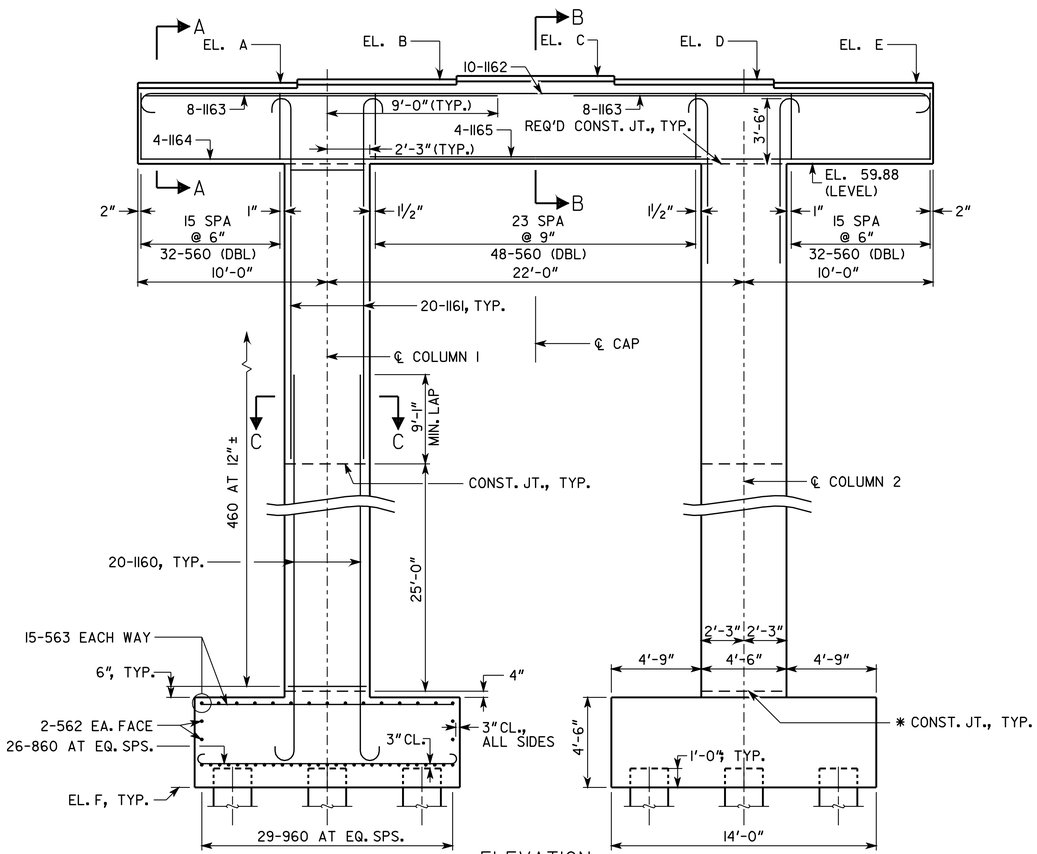

ELEVATION
(LOOKING AHEAD AT BENT 6)
(LOOKING BACK AT BENT 11)
SCALE: 1/4" = 1'-0"

* AT CONTRACTOR'S OPTION CONSTRUCTION JOINT MAY BE RELOCATED TO TOP OF FOOTING

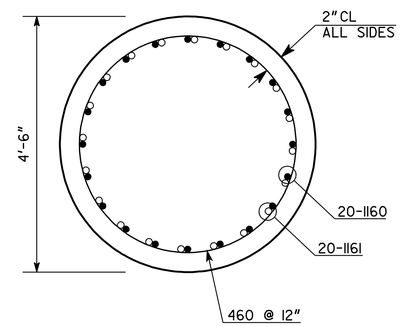

SECTION C-C
SCALE: 3/4" = 1'-0"

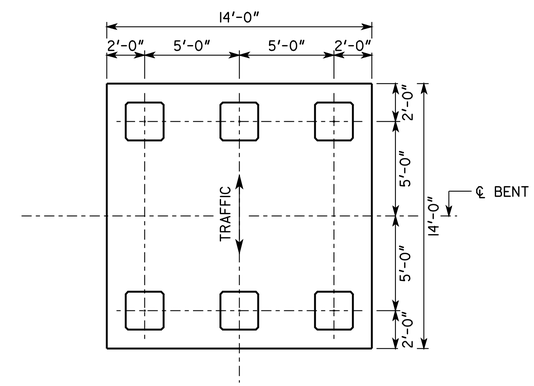

PILE LAYOUT
SCALE: 1/4" = 1'-0"

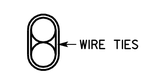

BARS TO BE BUNDLED SHALL BE BUNDLED VERTICALLY

BUNDLING DETAIL
NOT TO SCALE

PLAN DRIVING OBJECTIVE

ALL PILES SHALL BE 24 IN SQ. PSC

ALL PILES SHALL BE DRIVEN TO A DRIVING RESISTANCE OF 170 TONS AFTER A MINIMUM TIP ELEVATION OF -35.00' IS ACHIEVED.

NOTE: MAINTAIN 2" CL. ON ALL REINFORCEMENT UNLESS OTHERWISE NOTED

NOTE: BENT CAP IS SYMMETRICAL ABOUT ℄ CAP

TABLE OF ELEVATIONS

	STA. Z		A	B	C	D	E	F
BENT 6	299+09.00	BK	63.88	64.06	64.21	64.06	63.88	0.43
		AH	63.98	64.16	64.31	64.16	63.98	0.43
BENT 11	307+69.00	BK	63.98	64.16	64.31	64.16	63.98	-3.50
		AH	63.88	64.06	64.21	64.06	63.88	-3.50

SUBSTRUCTURE QUANTITIES

ITEM	BENT 6	BENT 11
CY CLASS AA CONCRETE	158.3	163.1
LB BAR REINF STEEL	29,925	30,798

BRIDGE NO. 1

THE LPA GROUP
THE LPA GROUP INCORPORATED
TRANSPORTATION CONSULTANTS
3595 ENGINEERING DRIVE
NORCROSS, GEORGIA 30092
(770) 263-9118

GEORGIA
DEPARTMENT OF TRANSPORTATION
PRECONSTRUCTION DIVISION-OFFICE OF BRIDGE DESIGN

INTERMEDIATE BENT 6 & 11 DETAILS
SR 204 SPUR (DIAMOND CAUSEWAY)
OVER SKIDAWAY NARROWS
CHATHAM COUNTY CSSTP-0008-00(651)

DATE | REVISIONS | BY

DRAWING NO. 35-35
BRIDGE SHEET 35 OF 48

SCALE: AS SHOWN OCTOBER 2010

DESIGNED ANZ CHECKED AWB REVIEWED WMD/WEI
DRAWN BSB DESIGN GROUP AWB APPROVED PVL