STATE	COUNTY	PROJECT NUMBER	SHEET NO.	TOTAL SHEETS
GA.		CSSTP-0008-00(442)	62	77

DROP CABLE SPLICE DETAIL FOR LOCAL CONTROLLER WITH STAR MODEM

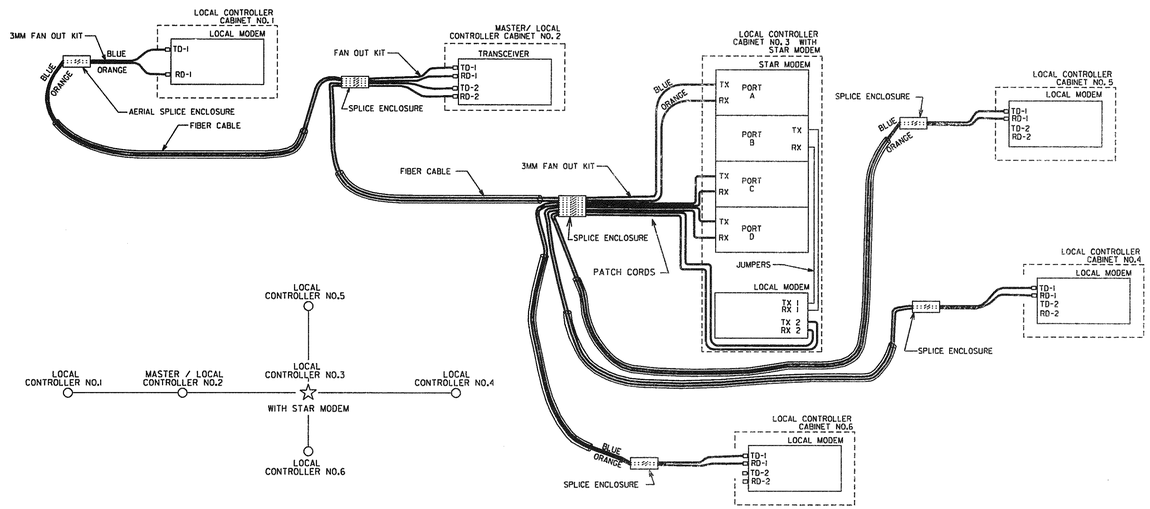

FIBER OPTIC DISTRIBUTION DETAIL (CLOSED LOOP SYSTEM ONLY)

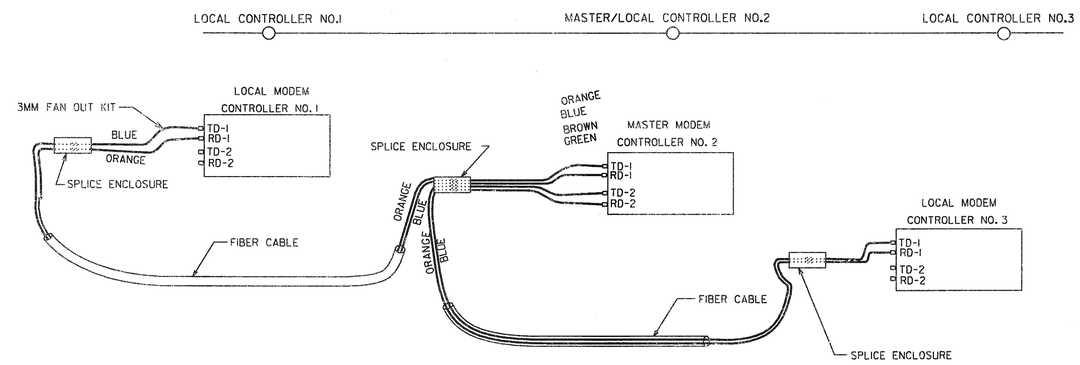

DROP CABLE SPLICE DETAIL FOR MASTER / LOCAL CONTROLLER WITH STAR MODEM

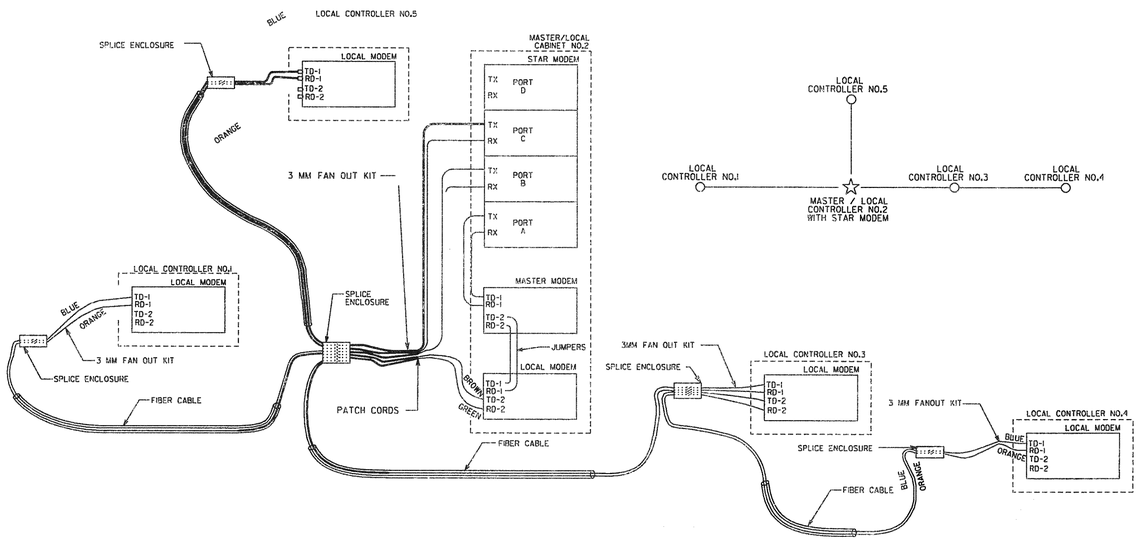

DATE	DEPARTMENT OF TRANSPORTATION STATE OF GEORGIA		
REVISION DESCRIPTION	TRAFFIC SIGNAL DETAIL *FIBER OPTICS DETAILS* *2 OF 2*		
REV. BY:	*APRIL 2010* NOT TO SCALE - REPORT ERRORS	DETAIL NUMBER: *TS-11*	

40-025