RELEASED FOR CONSTRUCTION 11/04/09

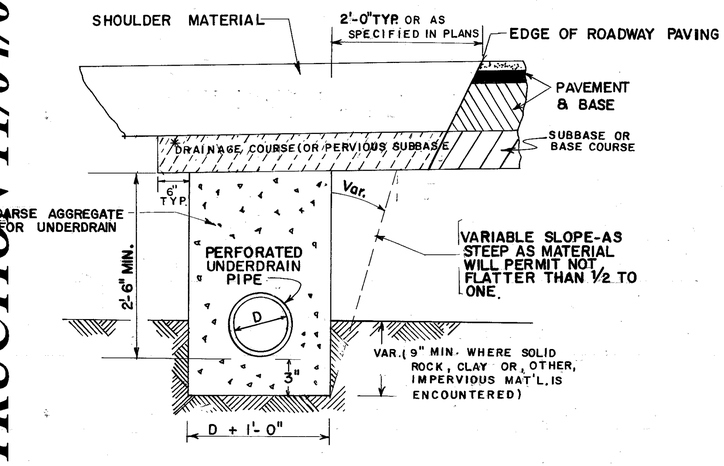

GENERAL DETAIL

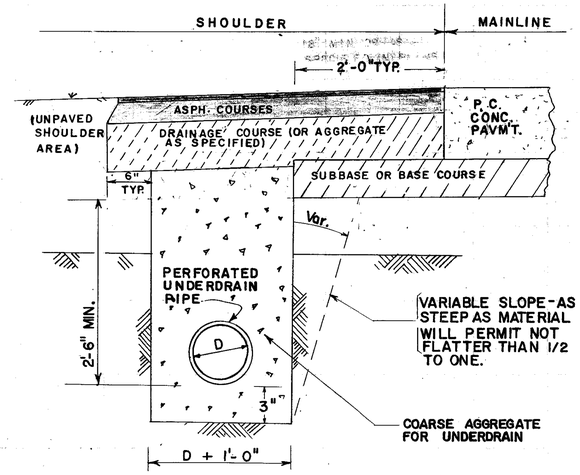

ASPHALT SHOULDER - P.C.C. PAVEMENT

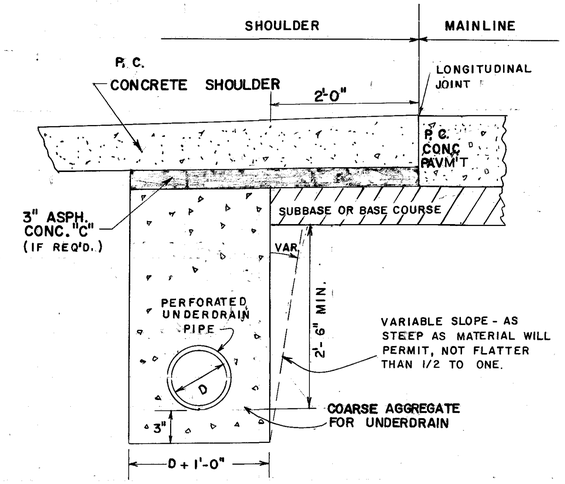

UNDER CONCRETE SHOULDER

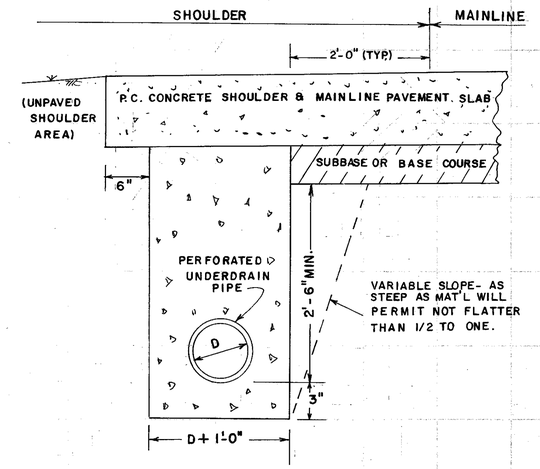

UNDER CONCRETE SHOULDER*

*CONSTRUCTED MONOLITHIC WITH MAINLINE
4'-0" PAVED SHOULDER SHOWN

PERFORATED UNDERDRAIN — TYPICAL INSTALLATIONS

*NOTE: PERFORATED UNDERDRAIN PIPE WILL BE INSTALLED COMPLETE PRIOR TO PLACING PERVIOUS SUB-BASE OR DRAINAGE COURSE.

SPECIAL NOTE:

DETAILS SHOWN HERE ARE TYPICAL AND MAY BE USED BY THE DESIGNER AS A GUIDE IN PREPARING TYPICAL SECTIONS. MINIMUM TRENCH DEPTHS & TRENCH WIDTHS SHOULD BE ADHERED TO AS SHOWN HOWEVER. SHOULDER DETAILS, PAVEMENT DESIGNS, DRAINAGE COURSES, ETC., WILL BE AS SHOWN ON THE TYPICAL SECTIONS FOR THE PROJECT AND MAY VARY FROM THE DEPICTIONS ABOVE.

ON CONSTRUCTION, THE TYPICAL SECTIONS IN THE PLANS SHOULD BE USED FOR SPECIFIC DETAILS. IF UNDERDRAIN IS NOT SHOWN ON THE TYPICAL SECTIONS OR ELSEWHERE IN THE PROJECT PLANS, INSTALLATION WILL BE AS SHOWN ABOVE AND AS DIRECTED BY THE ENGINEER.

GENERAL NOTES.

1. UNDERDRAINS MAY BE PLACED IN SHOULDER AREAS OR AS TRANSVERSE DRAINAGE UNDER PAVEMENT. SEE TYPICAL SECTION AND PLAN AND PROFILE SHEETS FOR SPECIAL CONDITIONS.
2. TRENCH SHALL BE SHAPED WITH SIDES AS NEARLY VERTICAL AS IS PRACTICAL AND WITH A FLAT BOTTOM.
3. MINIMUM GRADIENT FOR UNDERDRAIN PIPE SHALL BE 0.15%.
4. MAXIMUM DISTANCE BETWEEN OUTLETS SHALL BE 400' TO 500' WHERE CONDITIONS PERMIT.
5. DEAD ENDS OF PIPE SHALL BE CLOSED WITH METAL OR PLASTIC CAPS OR CONCRETE PLUGS. OUTFALL ENDS OF PIPE SHALL BE EQUIPPED WITH SCREEN.
6. LATERAL CONNECTIONS SHALL BE MADE WITH SUITABLE STANDARD FITTINGS. (ELLS, WYES OR TEES AS DETAILED)
7. THE DIMENSIONS (a thru g) SHOWN ON THE LATERAL CONNECTIONS FOR THE VARIOUS KINDS AND SIZES OF PERFORATED UNDERDRAIN SHALL BE IN AGREEMENT WITH THE MANUFACTURERS' STANDARD PRACTICE.
8. PLAIN WHITE (NO REFLECTIVE SHEETING) FLEXIBLE DELINEATOR POSTS WILL BE REQUIRED AT ALL OUTLETS EXITING ON SLOPES, BUT NOT REQUIRED IF UNDERDRAIN EXITS IN CONC. DITCH PAVING, DROP INLETS, ETC., POSTS WILL BE 2 FT. ± IN THE GROUND PLACED AS DIRECTED BY THE ENGINEER, SO AS TO BE MOST VISIBLE TO MOWERS. PAYMENT FOR UNDERDRAIN WILL INCLUDE THE DELINEATORS.

OUTLET DETAIL FOR PLASTIC UNDERDRAIN

(REQUIRED AT ALL OUTLETS WHERE PERFORATED PLASTIC UNDERDRAIN IS TERMINATED ON SLOPES).

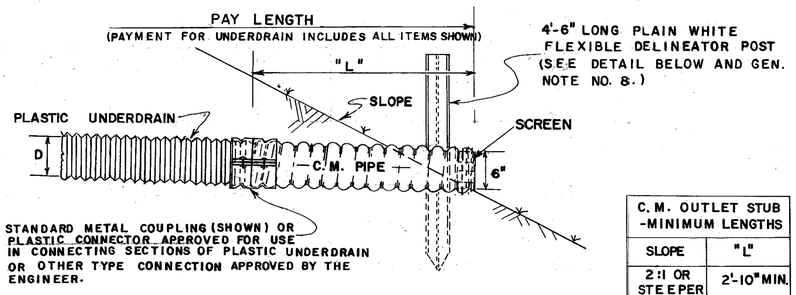

NOTE: "L" = MINIMUM LENGTH OF CORRUGATED METAL PIPE SECTION. THE C.M. OUTLET STUB SECTION MAY BE PERFORATED OR MAY BE NON-PERFORATED.

C.M. OUTLET STUB -MINIMUM LENGTHS	
SLOPE	"L"
2:1 OR STEEPER	2'-10" MIN.
2+:1 TO 4:1	5'-0" MIN.
4+:1 TO 6:1	10'-0" MIN.
FLATTER THAN 6:1	14'-0" MIN.

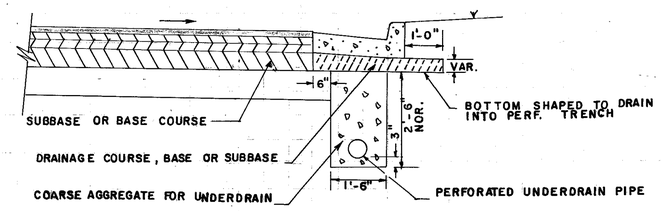

UNDER CURB & GUTTER

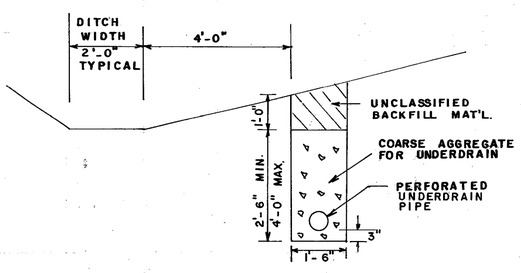

ADJACENT TO DITCH

NOTE: ALTERNATE FLEXIBLE DELINEATORS PERMITTED IF APPROVED BY THE D.O.T. LABORATORY.

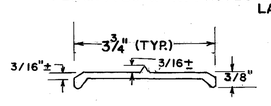

DELINEATOR POST SECTION (TYP.)

COLOR: WHITE

LENGTH: 4'-6" (from top to bottom point)

SPECIFICATION: SEC. 911 (EXCEPT REFLECTIVE SHEETING IS NOT REQUIRED)

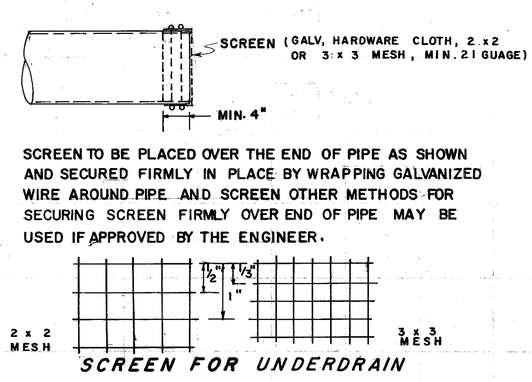

SCREEN TO BE PLACED OVER THE END OF PIPE AS SHOWN AND SECURED FIRMLY IN PLACE BY WRAPPING GALVANIZED WIRE AROUND PIPE AND SCREEN OTHER METHODS FOR SECURING SCREEN FIRMLY OVER END OF PIPE MAY BE USED IF APPROVED BY THE ENGINEER.

SCREEN FOR UNDERDRAIN

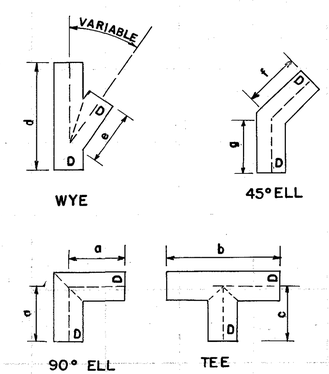

R.M.U.	ADD C & G, DITCH INSTALL	8-17-83
R.M.U.	Add Monolithic Conc. Sh.	5-27-81
R.M.U.	FLEXIBLE DELINEATOR	1-20-81

DEPARTMENT OF TRANSPORTATION
STATE OF GEORGIA

STANDARD

PERFORATED UNDERDRAIN

NO SCALE

REV. & REDR. JULY 1980

R.M.U. REV. R.M.U. TRA. G.M.E. CHK. R.K.C.

SUBMITTED Harry G. Stokes
STATE ROAD AND AIRPORT DESIGN ENGR.
APPROVED Thomas D. Moseley
STATE HIGHWAY ENGINEER

NUMBER 9029B