STATE	PROJECT NUMBER	SHEET NO.	TOTAL SHEETS
GA.	CSNHS-0008-00(415)01	364	472

RELEASED FOR CONSTRUCTION 11/04/09

AERIAL BUTT SPLICE DETAIL

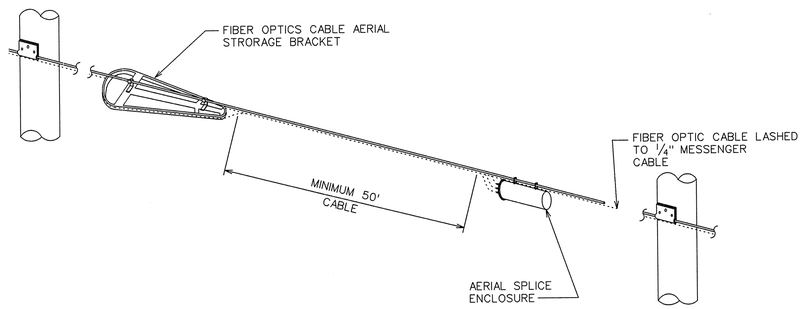

AERIAL SLACK LOOP DETAIL

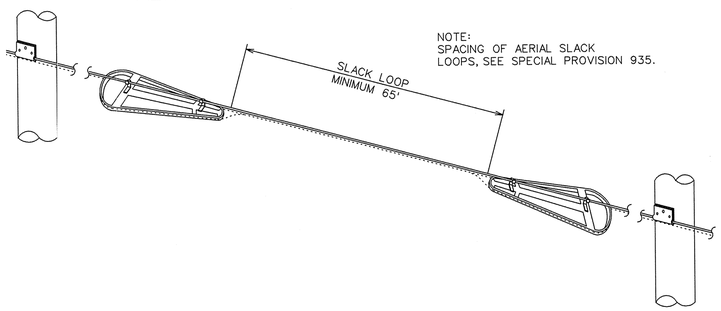

AERIAL DROP DETAIL

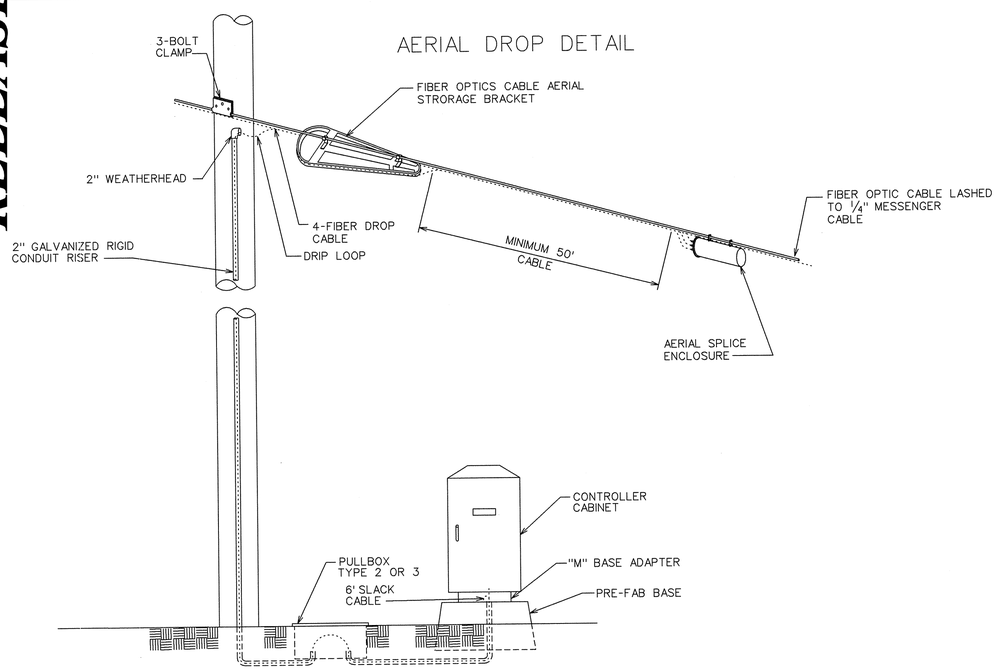

FIBER OPTIC DETAIL DROP - CABLE TERMINATION IN CONTROL CABINET MODEL 332 - MASTER SYSTEM

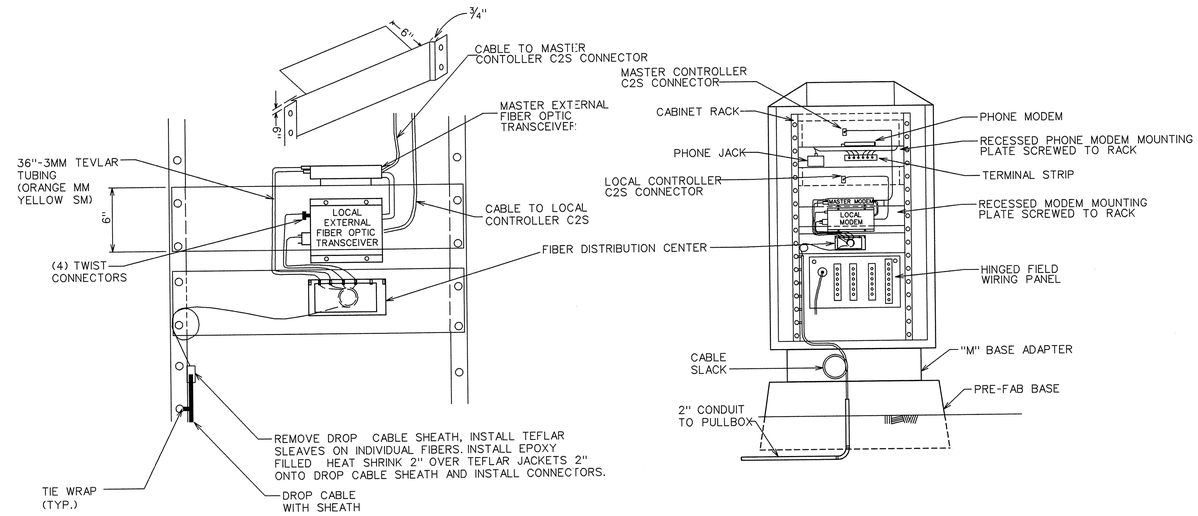

FIBER OPTIC DETAIL DROP-CABLE TERMINATION IN CONTROL CABINET - MODEL 332 LOCAL SYSTEM

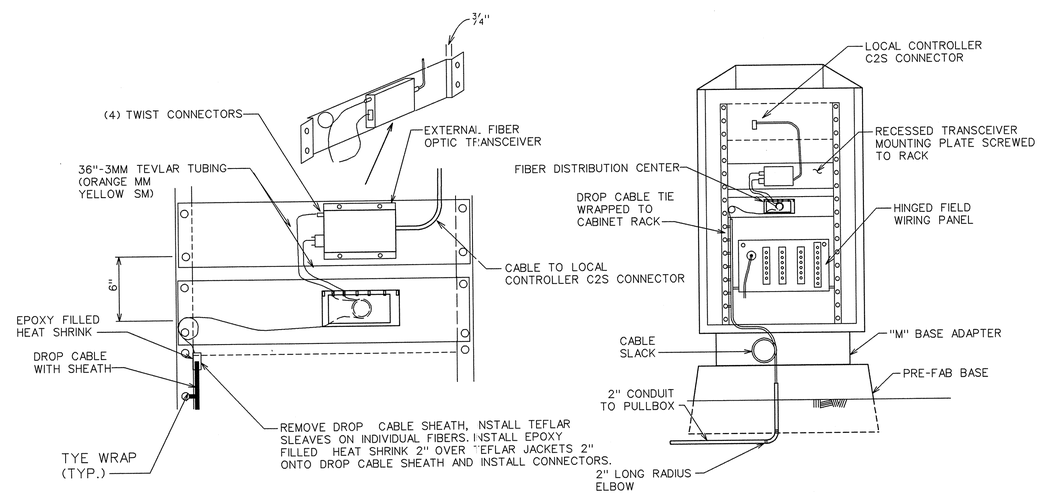

TS-10

DATE	REVISIONS
11/01/2000	ADDED FIBER OPTIC DISTRIBUTION CENTER
11/01/2000	ADDED PULLBOX 2
12/18/2001	CHANGED TITLE OF DROP CABLE TERMINATION

GEORGIA DEPARTMENT OF TRANSPORTATION
OFFICE OF TRAFFIC SAFETY & DESIGN

FIBER OPTIC DETAILS
SHEET 1 OF 2

NO SCALE — DECEMBER 2001

Y:\Roadways\AT740002\0084I5\Dgn\Const Details\TS-10.dgn 11/2/2011 8:34:48 AM jParks