RELEASED FOR CONSTRUCTION 11/04/09

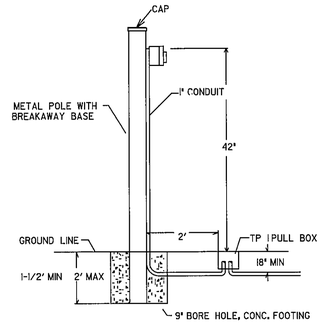

PED. PUSH BUTTON POST

FOR USE WHEN DITCHES OR UNEVEN TERRAIN IS BETWEEN POLE AND EDGE OF PAVEMENT.

PEDESTRIAN SIGNS

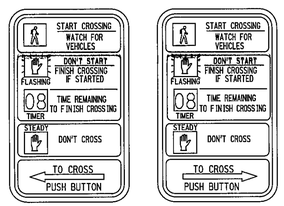

R1Ø-3E(L) 9" X 12" R1Ø-3E(R) 9" X 12"

FIG. A

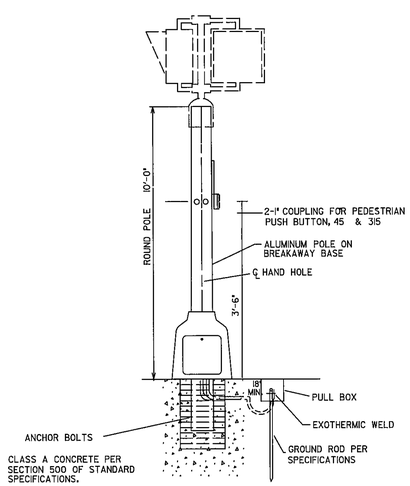

TYPICAL DETAIL FOR PEDESTRIAN SIGNAL POLES

PED PUSH BUTTON WITH SIGN (FIG "A")

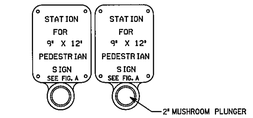

DETAIL "A"
THE TERM PUSH BUTTON SHALL MEAN A PUSH BUTTON STATION WITH AN INTERGRATED BUTTON AND SIGN ASSEMBLY AS SHOWN ON DETAIL "A"

PEDESTRIAN SIGNAL HEAD ORIENTATION

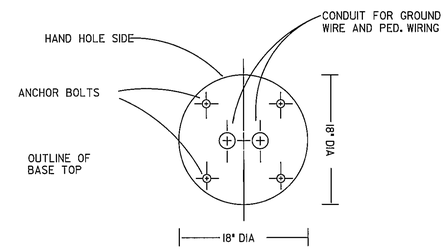

PED POLE BASE
(TOP VIEW)

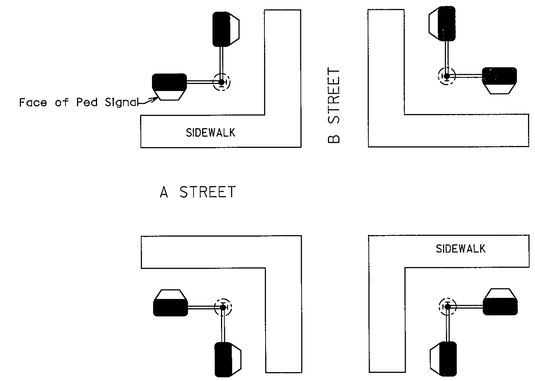

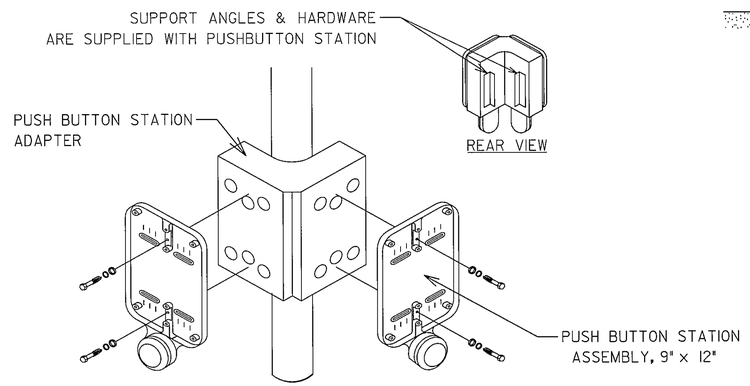

DOUBLE PUSH BUTTON STATION ADAPTER FOR 4" DIA. PEDESTRIAN POLE

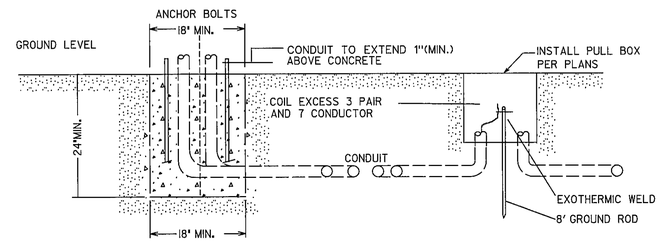

PED. POLE BASE

Guidelines For Usage On Metric Projects

When these details are incorporated into plans and or projects that are being prepared or constructed in metric units, exact or precise conversion to metric units is not required. The dimensions shown that are in feet and inches may be converted to corresponding metric units using the following "Rounded-Off" conversion factors: 1" =25mm, 4"=100mm, and 12" or 1' =300mm. All measurement notes that refer to linear feet and square yards shall be interpreted to mean linear meters and square meters.

GEORGIA
DEPARTMENT OF TRANSPORTATION

-NO SCALE -

REVISION DATES		
3/31/2002	3/5/2007	
10/31/2002		
2/15/2003		
7/27/2004		
3/04/2005		
8/8/2006		

STATE OF GEORGIA
DEPARTMENT OF TRANSPORTATION
OFFICE: TRAFFIC OPERATIONS
SIGNAL PLANS

DETAILS OF PEDESTRIAN FACILITIES
DECEMBER 1998

DRAWING No. TS-03a