STATE	PROJECT NUMBER	SHEET NO.	TOTAL SHEETS
GA.	CSNHS-0008-00(415)	319	472

RELEASED FOR CONSTRUCTION
11-04-2009

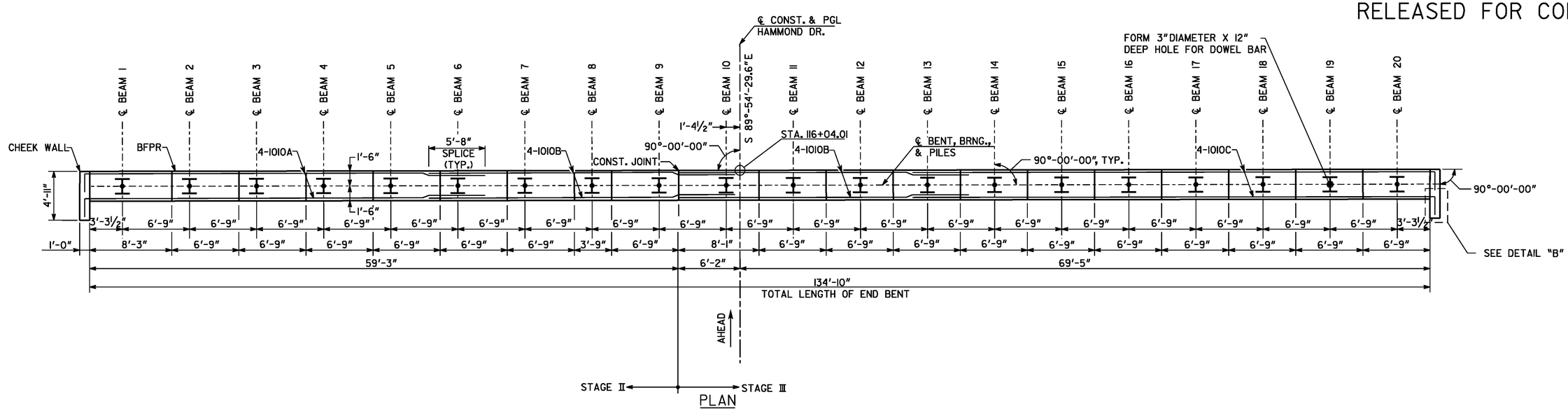

PLAN

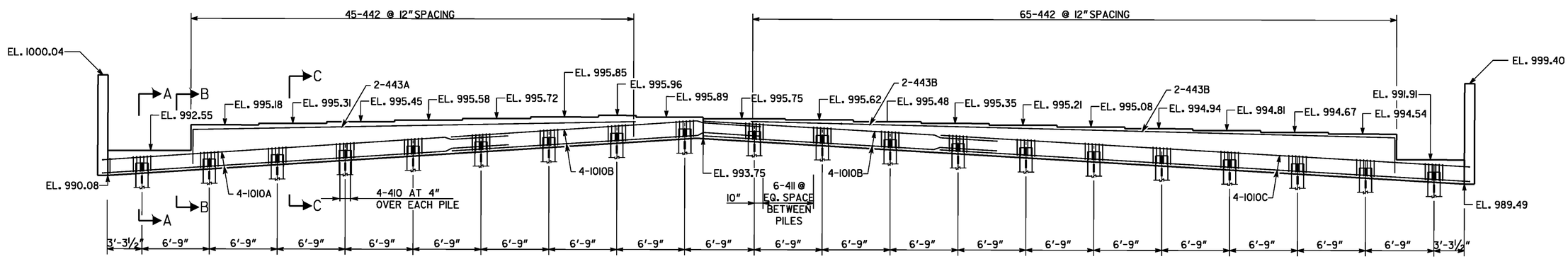

ELEVATION
(LOOKING AHEAD)

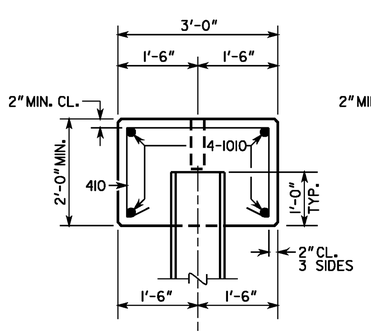

SECTION A-A

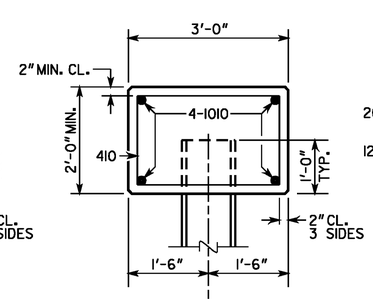

SECTION B-B

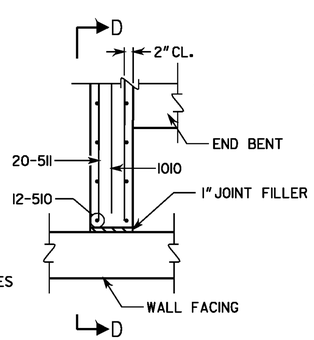

DETAIL "B"

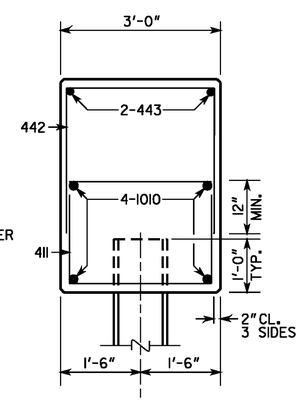

SECTION C-C

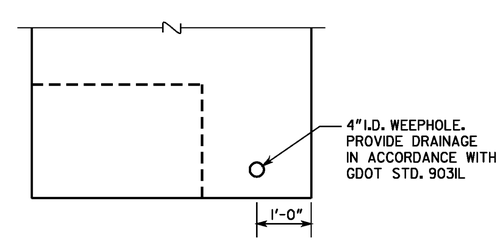

SECTION D-D

SUBSTRUCTURE QUANTITIES		
ITEM	STAGE II	STAGE III
CY CLASS AA CONCRETE	24.3	29.4
LB BAR REINF STEEL	2,202	2,596

PLAN DRIVING OBJECTIVE

ALL PILES WILL BE DRIVEN TO A DRIVING RESISTANCE OF 72 TONS AFTER MINIMUM TIP ELEVATIONS ARE ACHEIVED AS FOLLOWS:
BEAMS 1-10_____ ELEV. 945
BEAMS 11-20_____ ELEV. 938

ALL PILES SHALL BE STEEL H, HP 12 X 53

BRIDGE NO. 1

DRAWING NO. 35-21

NOTES:
1) MAINTAIN 2" CLEAR ON ALL BARS UNLESS OTHERWISE NOTED.
2) POUR CHEEK WALLS MONOLITHICALLY WITH CAP.
3) BOTTOM OF CHEEK WALLS ARE LEVEL.

THE LPA GROUP
THE LPA GROUP INCORPORATED
TRANSPORTATION CONSULTANTS
3595 ENGINEERING DRIVE
NORCROSS, GEORGIA 30092
(770) 263-9118

GEORGIA
DEPARTMENT OF TRANSPORTATION
PRECONSTRUCTION DIVISION-OFFICE OF BRIDGE DESIGN

END BENT 4
HAMMOND DRIVE OVER SR 400
FULTON COUNTY CSNHS-0008-00(415)

NO SCALE NOVEMBER 2009

DATE	REVISIONS	BY

BRIDGE SHEET 21 OF 25

DESIGNED ANZ CHECKED AWB REVIEWED WEI/WMD
DRAWN BSB DESIGN GROUP ACB APPROVED PVL

11/6/2009 8:40:38 AM Y:\Roadways\AT740002\Bridge\Final\21-bt.dgn