STATE	PROJECT NUMBER	SHEET NO.	TOTAL SHEETS
GA.	CSNHS-0008-00(415)	317	472

RELEASED FOR CONSTRUCTION
11-04-2009

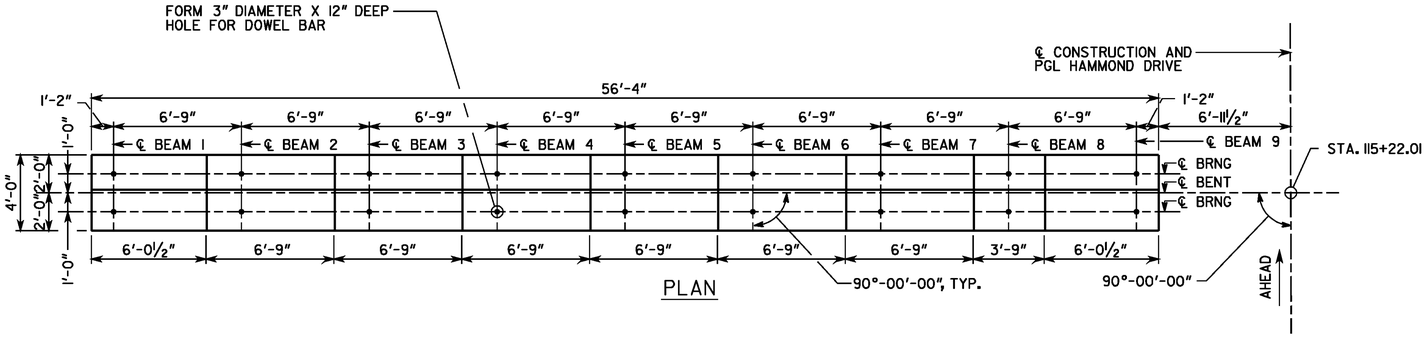

PLAN

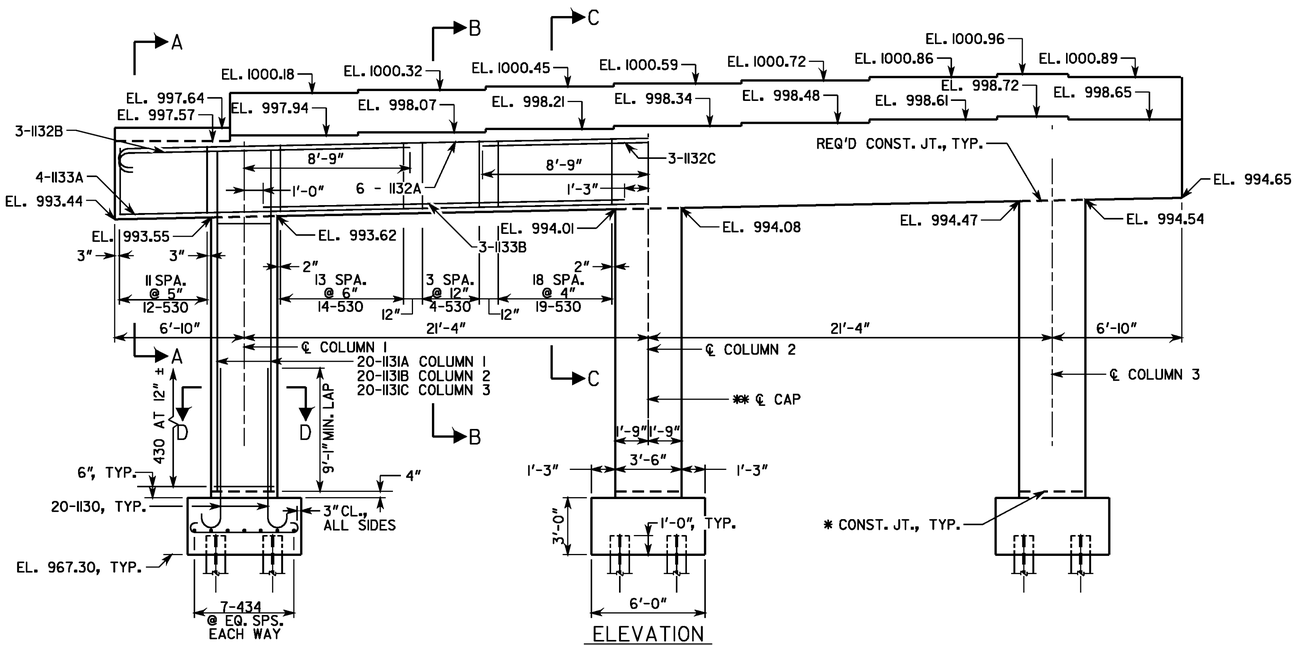

ELEVATION
(LOOKING AHEAD)

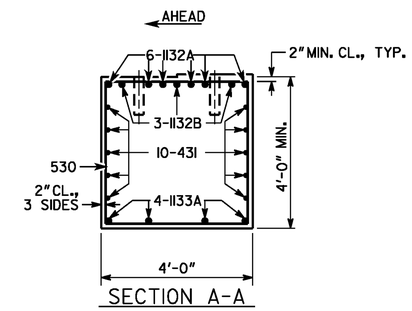

SECTION A-A

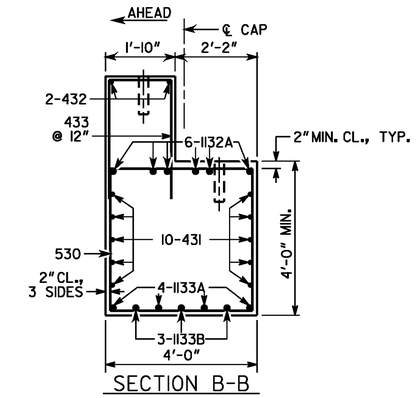

SECTION B-B

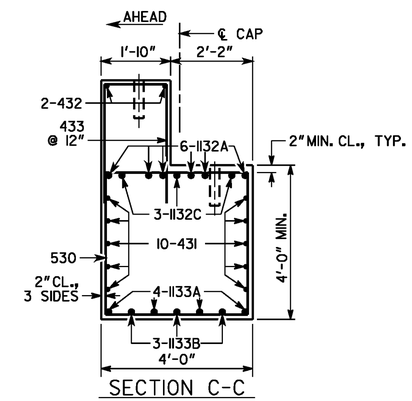

SECTION C-C

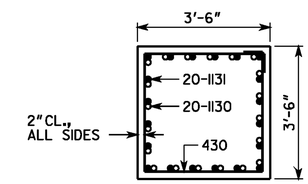

SECTION D-D

PLAN DRIVING OBJECTIVE

ALL PILES SHALL BE DRIVEN TO A DRIVING RESISTANCE OF 163 TONS AFTER A MINIMUM TIP ELEVATION OF 945 IS ACHIEVED.

ALL PILES SHALL BE STEEL H; HP 14 X 89

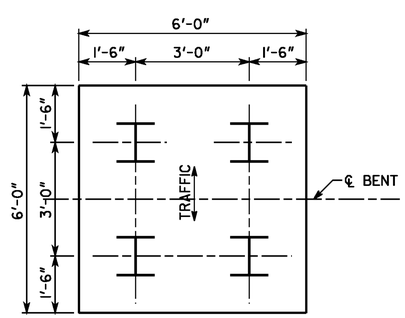

PILE LAYOUT

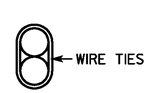

BARS TO BE BUNDLED SHALL BE BUNDLED VERTICALLY

BUNDLING DETAIL

SUBSTRUCTURE QUANTITIES	
ITEM	BENT 3L
CY CLASS AA CONCRETE	87.8
LB BAR REINF STEEL	18,252

NOTE: MAINTAIN 2" CL. ON ALL REINFORCEMENT UNLESS OTHERWISE NOTED

* AT CONTRACTOR'S OPTION CONSTRUCTION JOINT MAY BE RELOCATED TO TOP OF FOOTING

** BENT CAP REINFORCEMENT IS SYMMETRICAL ABOUT ℄ CAP

BRIDGE NO. 1

DRAWING NO. 35-19

THE LPA GROUP

THE LPA GROUP INCORPORATED
TRANSPORTATION CONSULTANTS
3595 ENGINEERING DRIVE
NORCROSS, GEORGIA 30092
(770) 263-9118

GEORGIA
DEPARTMENT OF TRANSPORTATION
PRECONSTRUCTION DIVISION-OFFICE OF BRIDGE DESIGN

BENT 3L

HAMMOND DRIVE OVER SR 400

FULTON COUNTY CSNHS-0008-00(415)

NO SCALE NOVEMBER 2009

DATE	REVISIONS	BY

BRIDGE SHEET 19 OF 25

DESIGNED ANZ CHECKED AWB REVIEWED WEI/WMD
DRAWN BSB DESIGN GROUP ACB APPROVED PVL

11/6/2009 8:40:32 AM R:\AT740002\Bridge\Final\19-bt.dgn