STATE	PROJECT NUMBER	SHEET NO.	TOTAL SHEETS
GA.	CSNHS-0008-00(415)	313	472

RELEASED FOR CONSTRUCTION
11-04-2009

REVISED 08-27-2010

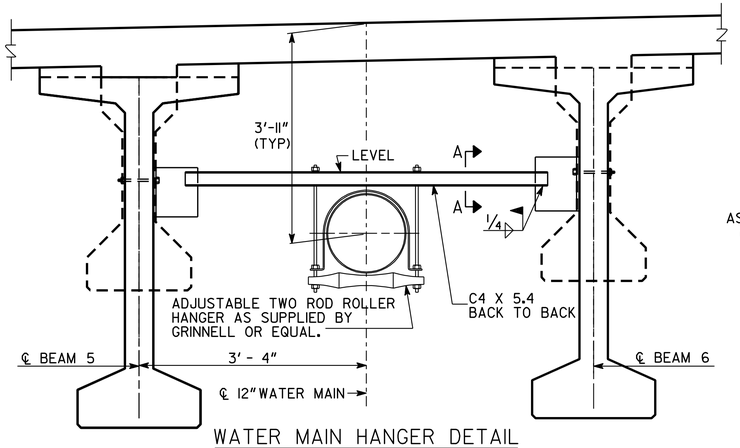

WATER MAIN HANGER DETAIL

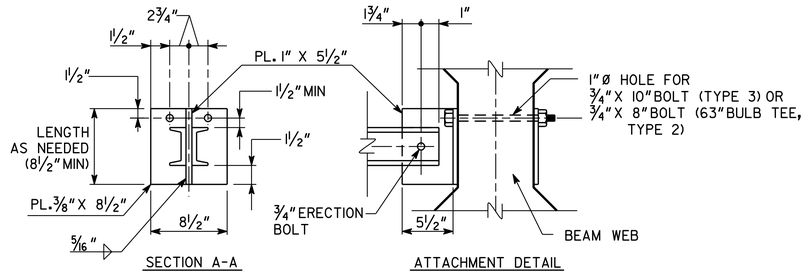

NOTE: ADJUST HANGER SUPPORT SPACING SLIGHTLY TO AVOID STRANDS

WATER MAIN HANGER DETAILS

FENCE NOTES:

1. FENCE SHALL BE 9 GAGE CHAIN LINK, DARK GREEN METALIZED, TWO INCH SECURITY FENCE.
2. 3 1/2" Ø SLEEVE SHALL BE CAST IN THE PARAPET. NON-SHRINK GROUT SHALL BE ALLOWED TO CURE FOR THREE DAYS BEFORE FENCE FABRIC IS INSTALLED.
3. PROVIDE EXPANSION SLEEVE FOR ALL RAILS TO MATCH SUPERSTRUCTURE JOINTS.
4. FOR POST SPACING, SEE BRIDGE SHEET 35-04.
5. FOR FURTHER DETAILS, SEE STD. SPEC. ARTICLES 643 AND 894.
6. FABRIC SHALL BE FASTENED TO POST AT INTERVALS NOT GREATER THAN 14".
7. PIPE, POST, AND ALL HARDWARE SHALL HAVE A DARK GREEN METALIZED COATING.

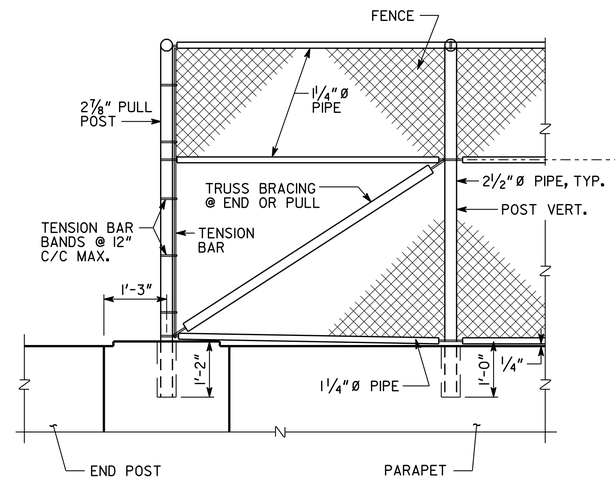

FENCE ELEVATION

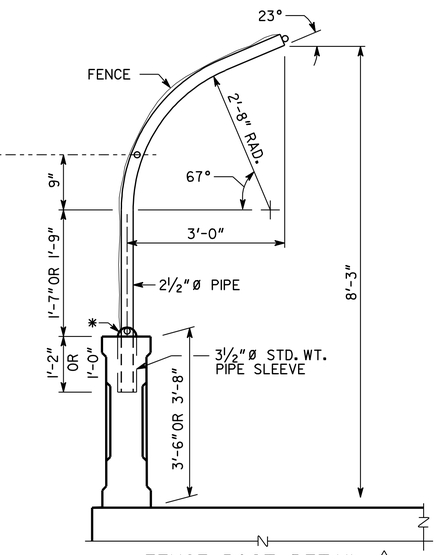

FENCE POST DETAIL

* NON-SHRINK PORTLAND CEMENT GROUT, TROWEL TO PROVIDE POSITIVE DRAINAGE.

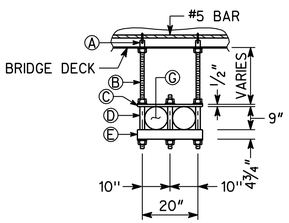

2 CONDUIT

- Ⓐ 3/4" LOOP INSERT FOR 3/4" - 10 ROD.
- Ⓑ 3/4" - 10 GALVANIZED MACHINE ROD
- Ⓒ 1/2" X 2" X 23" P.V.C. FLAT BAR.
- Ⓓ 1" X 9" P.V.C. SPACER TUBE.
- Ⓔ 1/4" X 2" X 2" X 23" FIBERGLASS TUBE.
- Ⓖ 8" Ø FIBERGLASS CONDUIT

DETAIL OF HANGER FOR AGL NETWORK CONDUIT

NOTE: PLACE HANGER ATTACHMENTS AT INTERVALS OF UP TO 15 FT.

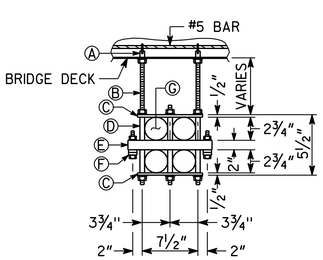

4 CONDUIT

- Ⓐ 3/4" LOOP INSERT FOR 3/4" - 10 ROD.
- Ⓑ 3/4" - 10 GALVANIZED MACHINE ROD
- Ⓒ 1/2" X 2" X 9 1/2" P.V.C. FLAT BAR.
- Ⓓ 1" X 2 3/4" P.V.C. SPACER TUBE.
- Ⓔ 1/4" X 2" X 2" X 13 1/2" FIBERGLASS TUBE.
- Ⓕ STRAND CLAMP
- Ⓖ 2" Ø FIBERGLASS CONDUIT

DETAIL OF HANGER FOR TRAFFIC CONDUIT

NOTE: PLACE HANGER ATTACHMENTS AT INTERVALS OF UP TO 15 FT.

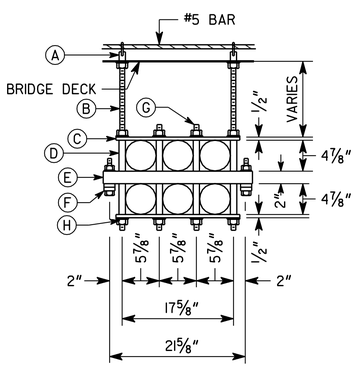

6- 4" CONDUIT

- Ⓐ 3/4" LOOP INSERT FOR 3/4" - 10 ROD.
- Ⓑ 3/4" - 10 GALVANIZED MACHINE ROD
- Ⓒ 1/2" X 2" X 19 5/8" P.V.C. FLAT BAR.
- Ⓓ 1" X 4 7/8" P.V.C. SPACER TUBE.
- Ⓔ 2" X 2" X 23 5/8" GALVANIZED SQUARE TUBE.
- Ⓕ 5/8" STRAND CLAMP ASSEMBLY
- Ⓖ 3/4" - 10 Ø X 10" GALVANIZED THREADED ROD.
- Ⓗ 3/4" NUTS, WASHERS, AND LOCK WASHERS.
  12" HIGH X 24" WIDE OPENING REQUIRED THROUGH END WALLS
  12" HIGH X 24" WIDE OPENING REQUIRED THROUGH DIAPHRAGMS.

DETAIL OF HANGER FOR AT&T CONDUIT

NOTE: PLACE HANGER ATTACHMENTS AT INTERVALS OF UP TO 10 FT.

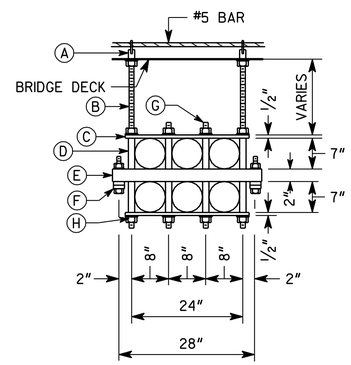

6- 6" CONDUIT

- Ⓐ 3/4" LOOP INSERT FOR 3/4" - 10 ROD.
- Ⓑ 3/4" - 10 GALVANIZED MACHINE ROD
- Ⓒ 1/2" X 2" X 26" P.V.C. FLAT BAR.
- Ⓓ 1" X 7" P.V.C. SPACER TUBE.
- Ⓔ 2" X 2" X 30" GALVANIZED SQUARE TUBE.
- Ⓕ 5/8" STRAND CLAMP ASSEMBLY
- Ⓖ 3/4" - 10 Ø X 10" GALVANIZED THREADED ROD.
- Ⓗ 3/4" NUTS, WASHERS, AND LOCK WASHERS.
  16" HIGH X 24" WIDE OPENING REQUIRED THROUGH END WALLS
  16" HIGH X 24" WIDE OPENING REQUIRED THROUGH DIAPHRAGMS.

DETAIL OF HANGER FOR GPC ELECTRIC CONDUIT

NOTE: PLACE HANGER ATTACHMENTS AT INTERVALS OF UP TO 10 FT.

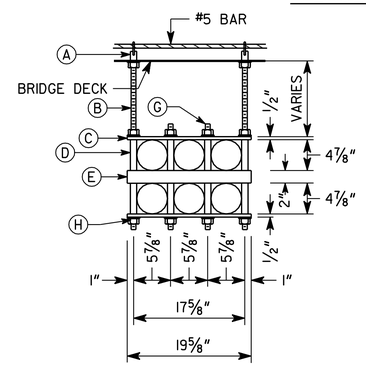

6- 4" CONDUIT

- Ⓐ 3/4" LOOP INSERT FOR 3/4" - 10 ROD.
- Ⓑ 3/4" - 10 GALVANIZED MACHINE ROD
- Ⓒ 1/2" X 2" X 19 5/8" GALVANIZED BAR.
- Ⓓ 1" X 4 7/8" GALVANIZED SPACER TUBE.
- Ⓔ 2" X 2" X 19 5/8" GALVANIZED SQUARE TUBE.
- Ⓖ 3/4" - 10 Ø X 10" GALVANIZED THREADED ROD.
- Ⓗ 3/4" NUTS, WASHERS, AND LOCK WASHERS.
  12" HIGH X 24" WIDE OPENING REQUIRED THROUGH END WALLS
  12" HIGH X 24" WIDE OPENING REQUIRED THROUGH DIAPHRAGMS.

DETAIL OF HANGER FOR VERIZON/TIME WARNER CONDUIT

NOTE: PLACE HANGER ATTACHMENTS AT INTERVALS OF UP TO 10 FT.

USE ANVIL C.B. UNIVERSAL CONCRETE INSERT FIG. 282, AAA TECHNOLOGY & SPECIALTIES CO., INC. FIGURE 912, OR APPROVED EQUAL. HANGER ASSEMBLIES SHALL BE FURNISHED AND INSTALLED BY GAS COMPANY. INSERTS SHALL BE FURNISHED AND INSTALLED BY CONTRACTOR. HANGERS SHALL BE SPACED AT A MAXIMUM OF 25'-0" O.C.

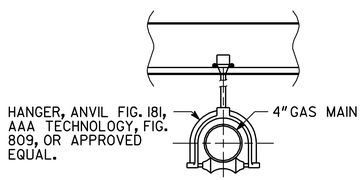

GAS MAIN SUPPORT DETAILS

BRIDGE NO. 1

DRAWING NO. 35-15

THE LPA GROUP

THE LPA GROUP INCORPORATED
TRANSPORTATION CONSULTANTS
3595 ENGINEERING DRIVE
NORCROSS, GEORGIA 30092
(770) 263-9118

GEORGIA
DEPARTMENT OF TRANSPORTATION
PRECONSTRUCTION DIVISION-OFFICE OF BRIDGE DESIGN

MISCELLANEOUS DETAILS
HAMMOND DRIVE OVER SR 400
FULTON COUNTY CSNHS-0008-00(415)

NO SCALE NOVEMBER 2009

REVISIONS	BY	DATE
REVISED PARAPET SECTION △1	BSB	08/27/2010

BRIDGE SHEET 15 OF 25

DESIGNED ANZ | CHECKED AWB | REVIEWED WEI/WMD
DRAWN BSB | DESIGN GROUP ACB | APPROVED PVL

11/2/2011 9:51:37 AM R:\AT740002\Bridge\Final\15-mi.dgn